autobaseTouch

Touch Panel Computer

autobaseTouch

Touch Panel Computer

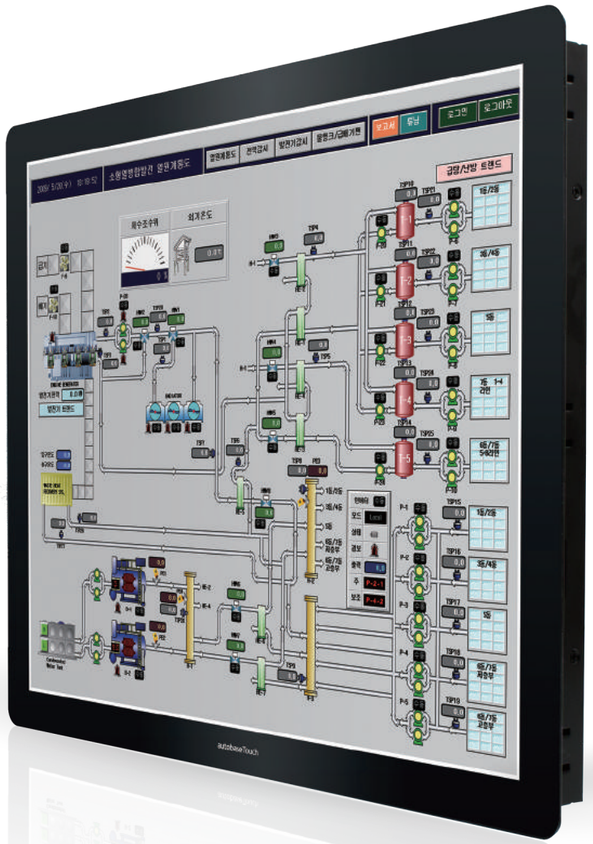

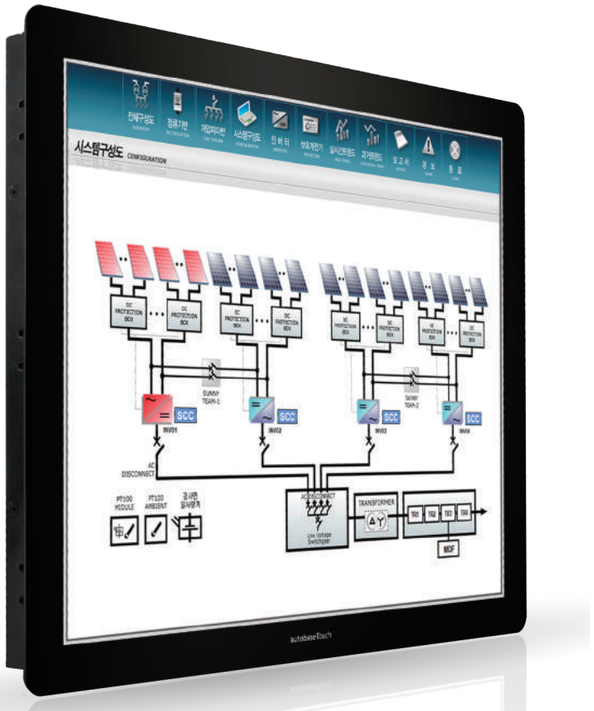

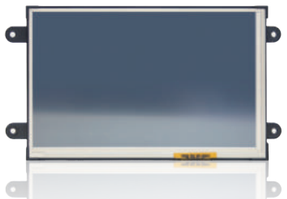

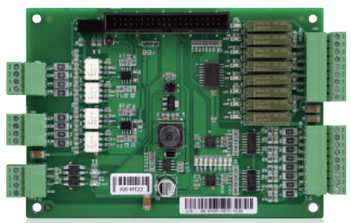

AutoBase

Address
1201, Biz Center, SKnTechno Park,
124, Sagimakgol-ro, Jungwon-gu
Seongnam-si, Gyeonggi-do, Korea

Telephone
Office : +82.31.776.0800
Fax : +82.31.776.0802

http://www.autobase.biz
autobasekr@gmail.com

Why autobase?
Because of autobase!

autobase

SCADA & Touch Panel & PLC

Innovation

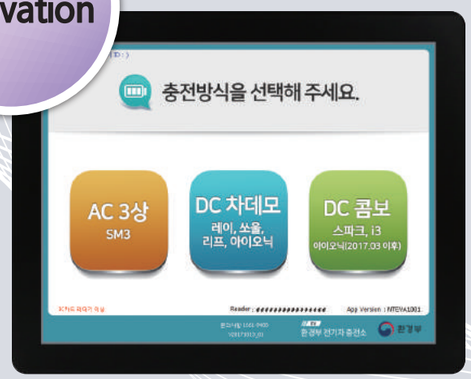

Cost Cutting

Productivity

Stability

Network Communication Drivers

Customer Satisfaction

인텔리전트 터치패널 컴퓨터

Autobase Touch 패널 컴퓨터는 제품 자체의
온도 및 상태를 스스로 감시하여 이상 발생이
예상되면 경보를 발생해 시스템 관리자가
효과적으로 유지 보수를 할 수 있게 도와주고,
부품의 수명을 예견하여 사용자에게 알려줍니다.
이러한 자가 유지 보수 기능은 갑자기 시스템의 작동이
중지되는 등의 돌발 상황을 사전에 방지하여
안정적으로 감시, 제어 할 수 있도록 도와줍니다.

개발 생산성 극대화
***오토베이스 SCADA에 최적화**

기존의 다른 터치 패널 제품들이 각각의 전용
프로그램을 이용하여 개발/실행을 해야 하는
어려움이 있는 것과 달리 오토베이스
터치 패널 제품은 Autobase SCADA 개발 경험이
있는 사용자라면 누구나 Autobase SCADA를
개발하는 것과 동일한 방법으로 쉽게 개발이 가능합니다.
상위 시스템의 Autobase SCADA에 통합시
기존 프로젝트 및 라이브러리를 그대로
재사용 할 수 있어 개발에 필요한 시간과 비용을
절약해주며 생산성을 극대화할 수 있습니다.

완벽한 통신 호환성
***700여개의 통신드라이버 내장**

Autobase SCADA를 포함하고 있는
Autobase Touch 제품은 700여개의
통신 드라이버를 내장하고 있어 통신 드라이버의
추가 구매 없이 사용할 수 있므므로
통신 드라이버를 구매하거나 별도로 개발을
하는데 드는 시간과 비용을 절감할 수 있습니다.
특히 통신 드라이버의 개발이 필요할 때에는
본사에서 무상으로 개발하여 드립니다.

철저한 AS와 고객 서비스

20여년 자동화 전문회사의 집약된 기술력을
바탕으로 주식회사 오토베이스는 고객과의
약속을 최우선으로 하는 고객지원 정책인
레인보우 서비스를 자체적으로 운영하고 있으며,
오토베이스에서 생산 판매하는 모든 제품은
철저한 품질관리를 거쳐 전국규모의
대리점망을 통하여 공급되므로 신속하고
철저한 AS가 가능합니다.

Easy and Simple HMI
ATS-M1000DA Series

Save the Cost and Time

More than 700 communication drivers and 4,000 graphic libraries(including animation objects) reduce your development cost and time.

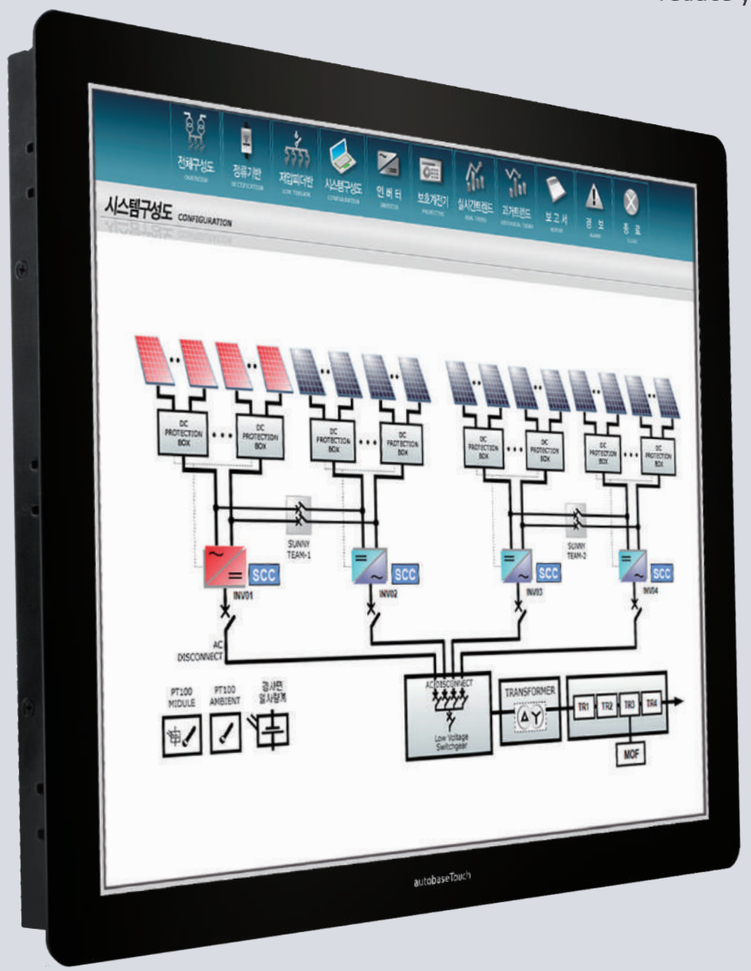

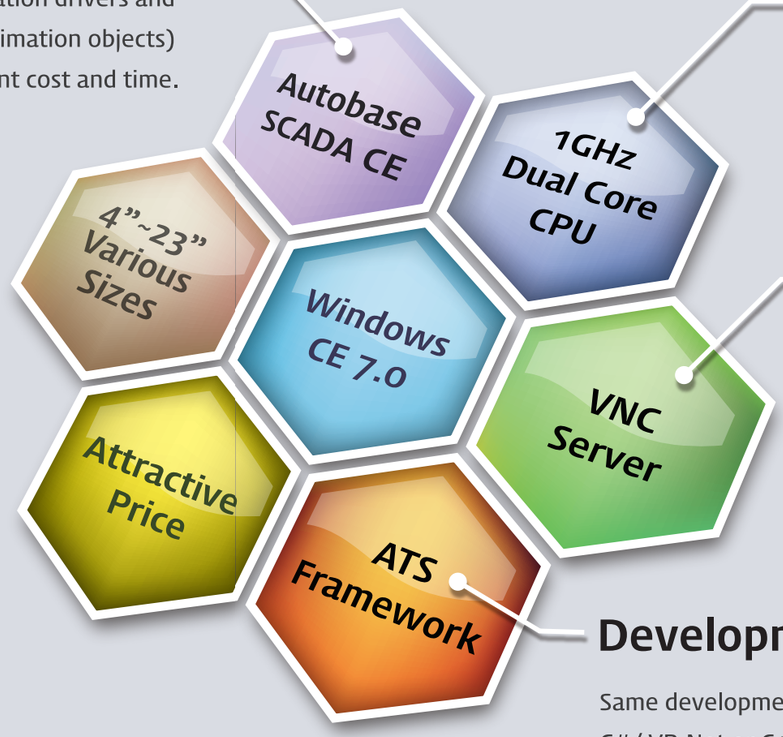

High Performance

The ARM® Cortex®-A9 processor is the power-efficient and popular high performance choice in low power or thermally constrained cost-sensitive devices.

VNC* Server for ATS Series

Remote screen sharing service, VNC server solution offers a simple and cost effective way for remote controlling and maintaining industrial PCs, thin clients or even smart phones.

*VNC : Virtual Network Computing

Development Using Visual Studio

Same development environment as a PC. Programmable in C#/ VB.Net or C++ using Microsoft's Visual Studio quick and easy.

Camera Port NTSC/PAL format digital video playback and recording. Using Streaming server, you can monitor or record in real time the scene of a remote location.

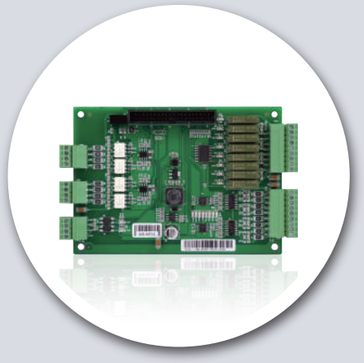

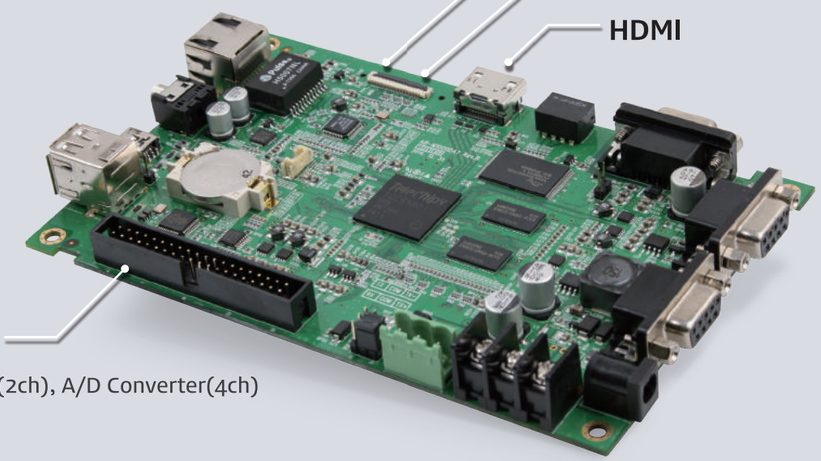

Extension I/O

GPIO(16EA), PWM(2ch), A/D Converter(4ch)

Windows CE based Embedded Mainboard

Autobase AB-M1000DA series mainboards are simpler, generate less heat, and are much more energy efficient. These characteristics can yield more reliable operation in harsh environments. AB-M1000DA series mainboards have excellent extensibility and reliability. (AB-M1000DA series mainboards are designed by Autobase Inc.)

Easy and Simple HMI
ATS-M1000DA Series

Windows CE Panel Computers are simpler, generate less heat, and are much more energy efficient. These characteristics can yield more reliable operation in harsh environments.

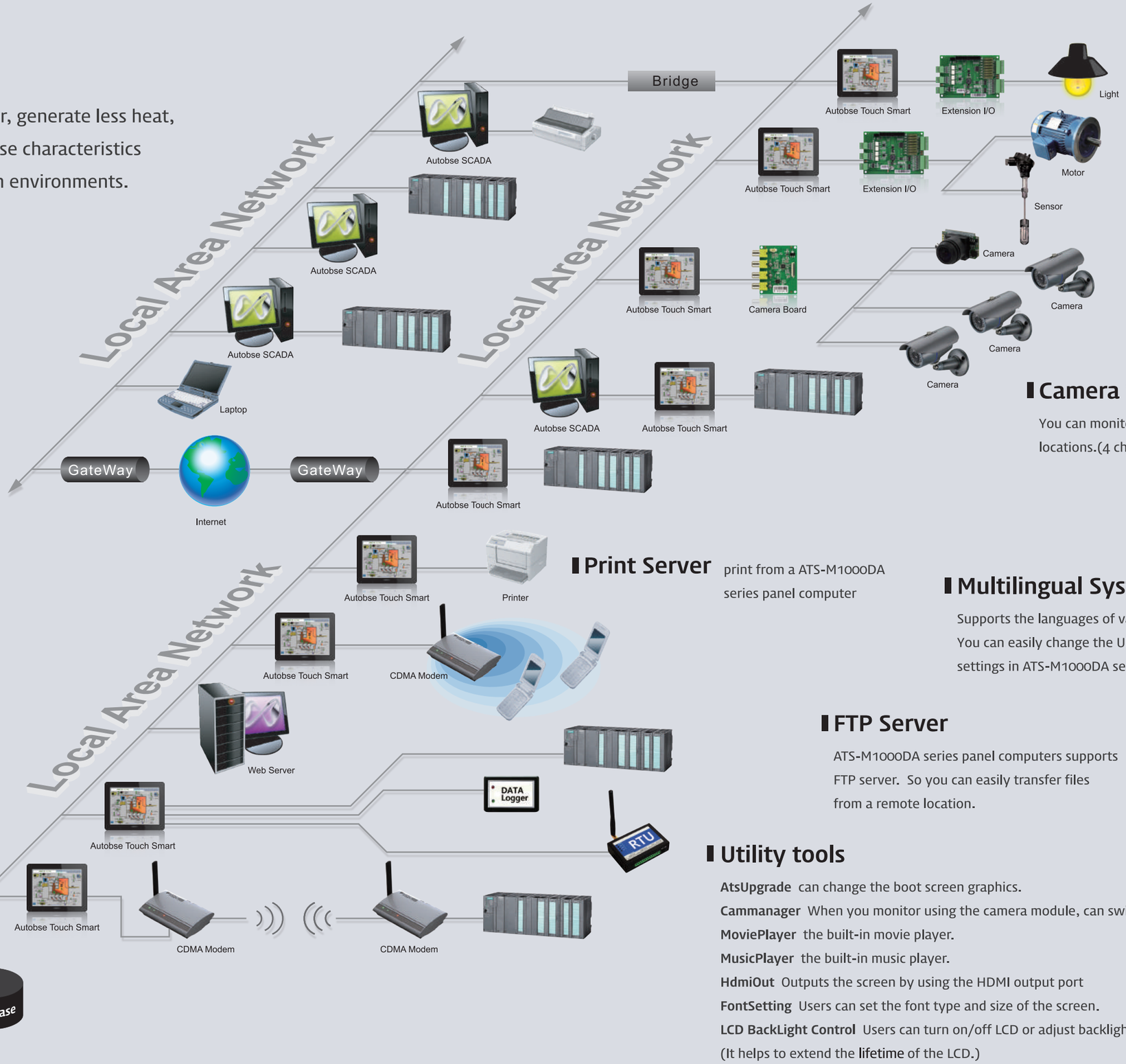

Web Server

The Autobase SCADA enables easy field monitoring and control over the Internet using the web server.

700 communication drivers and 4,000 graphic libraries

The Autobase SCADA has been developed as the Windows OS compatible. We implement this S/W in the computer which is connected to the remote equipments (PLCs/controllers), and this computer monitors and controls the status of every machines and also measurements/parameters which are linked with the remote automation equipments. The Autobase consists of all the features required for the automation, especially this includes the basic fucntions of the HMI/SCADA, and this could link to databases and web server.
The Autobase provides the ideal solution for your system.

Camera Streaming

You can monitor or record in real time from remote locations.(4 channel video Input and selectable)

Print Server

print from a ATS-M1000DA series panel computer

Multilingual System

Supports the languages of various countries.
You can easily change the UI language and Locale settings in ATS-M1000DA series devices.

FTP Server

ATS-M1000DA series panel computers supports FTP server. So you can easily transfer files from a remote location.

Utility tools

AtsUpgrade can change the boot screen graphics.
Cammanager When you monitor using the camera module, can switch or record the screen.
MoviePlayer the built-in movie player.
MusicPlayer the built-in music player.
HdmiOut Outputs the screen by using the HDMI output port
FontSetting Users can set the font type and size of the screen.
LCD BackLight Control Users can turn on/off LCD or adjust backlight brightness.
(It helps to extend the lifetime of the LCD.)
HangulSoftKeyChange can set the size and display format of the software keyboard.

Autobase Touch Smart
ATS Series Resistive

5.6"

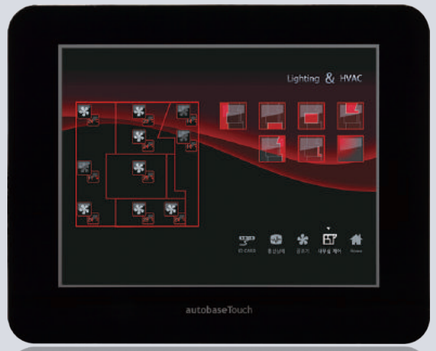

ATS-M1000DA05B

Specifications...	
Screen Size	5.6 inch
Screen Resolution	640*480
Touch Screen	4 Wire Resistive
CPU	Cortex A9 Dual 1,000MHz
Memory	DRAM 512MB DDR3, NAND Flash 512MB
OS	Windows Compact 7(CE 7)
USB	USB Host 2 Ports, USB Device 1 Port
Audio	Speaker embedded, Stereo audio output(Ø3.5), 1 Mic(Option)
Camera	Option
Ethernet	1 Port(Gigabit)
SD Card	MicroSD 1 Slot (SDHC up to 32GB, SDXC up to 2TB)
Serial Port	4 Ports(RS-232C 3 Ports, RS-485/232C 1 Port)
Extension Port	GPIO(16ch), PWM(2ch), A/D Converter(4ch)
Voltage	DC 9~24V
Operating Temperature	Min. -10℃ / Max. 70℃
Waterproof	IP65 대응
Dimension(mm)	152.9(H)*122.7(V)*40.7(D)

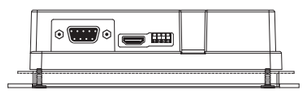

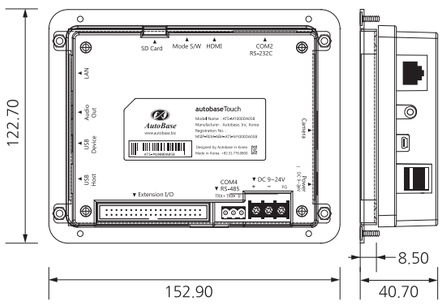

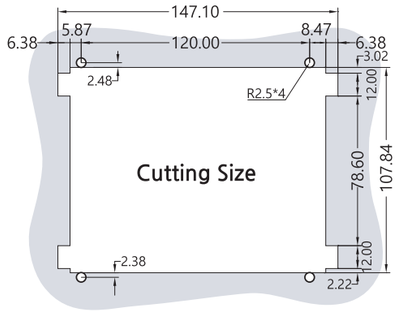

Unit : mm

Autobase Touch Smart
ATS Series Resistive

7"

ATS-M1000DA07W

Specifications...	
Screen Size	7 inch
Screen Resolution	800*480
Touch Screen	4 Wire Resistive
CPU	Cortex A9 Dual 1,000MHz
Memory	DRAM 512MB DDR3, NAND Flash 512MB (Option : DRAM 1GB DDR3, NAND Flash 1GB)
OS	Windows Compact 7(CE 7)
USB	USB Host 2 Ports, USB Device 1 Port
Audio	Speaker embedded, Stereo audio output(Ø3.5), 1 Mic(Option)
Camera	Option
Ethernet	1 Port(Gigabit)
SD Card	1 Slot(SDHC up to 32GB, SDXC up to 2TB)
Serial Port	4 Ports(RS-232C 3 Ports, RS-485/232C 1 Port)
Extension Port	GPIO(16ch), PWM(2ch), A/D Converter(4ch)
Voltage	DC 9~24V
Operating Temperature	Min. -10℃ / Max. 70℃
Waterproof	IP65 대응
Dimension(mm)	227(H)*148(V)*53.7(D)

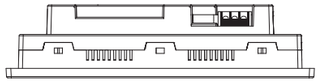

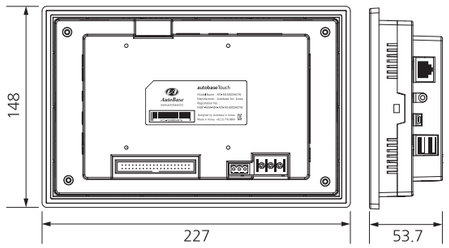

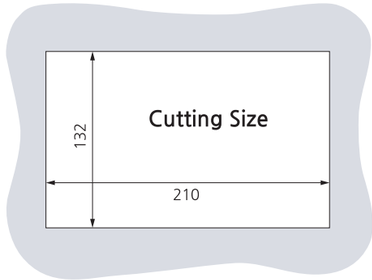

Unit : mm

Autobase Touch Smart
ATS Series Resistive

8"

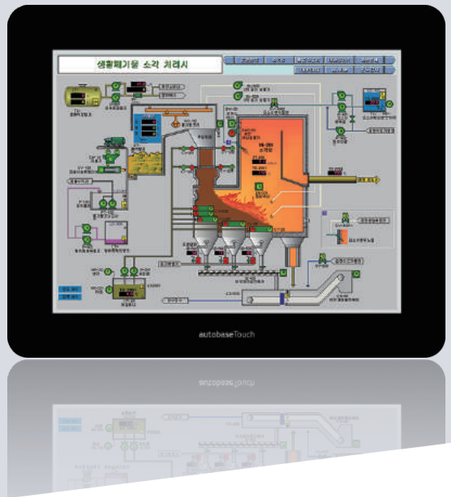

ATS-M1000DA08C

Specifications...	
Screen Size	8 inch
Screen Resolution	800*600
Touch Screen	4 Wire Resistive
CPU	Cortex A9 Dual 1,000MHz
Memory	DRAM 512MB DDR3, NAND Flash 512MB (Option : DRAM 1GB DDR3, NAND Flash 1GB)
OS	Windows Compact 7(CE 7)
USB	USB Host 2 Ports, USB Device 1 Port
Audio	Speaker embedded, Stereo audio output(Ø3.5), 1 Mic(Option)
Camera	Option
Ethernet	1 Port(Gigabit)
SD Card	1 Slot(SDHC up to 32GB, SDXC up to 2TB)
Serial Port	4 Ports(RS-232C 3 Ports, RS-485/232C 1 Port)
Extension Port	GPIO(16ch), PWM(2ch), A/D Converter(4ch)
Voltage	DC 9~24V
Operating Temperature	Min. -10℃ / Max. 70℃
Waterproof	IP65 대응
Dimension(mm)	209(H)*168.5(V)*42.45(D)

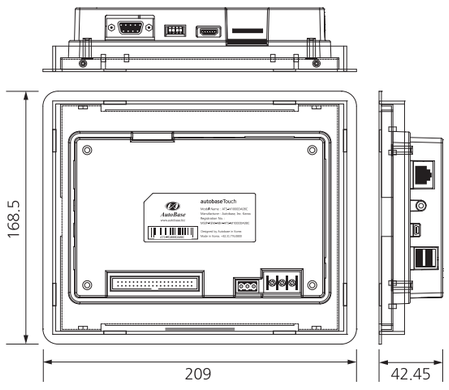

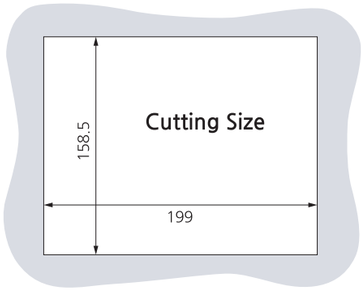

Unit : mm

ATS Series

Autobase Touch Smart
ATS Series Resistive

10.2"

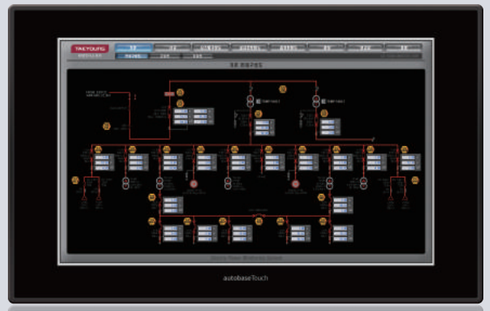

ATS-M1000DA10W

Specifications...	
Screen Size	10.2 inch
Screen Resolution	800*480
Touch Screen	4 Wire Resistive
CPU	Cortex A9 Dual 1,000MHz
Memory	DRAM 512MB DDR3, NAND Flash 512MB (Option : DRAM 1GB DDR3, NAND Flash 1GB)
OS	Windows Compact 7(CE 7)
USB	USB Host 2 Ports, USB Device 1 Port
Audio	Speaker embedded, Stereo audio output(Ø3.5), 1 Mic(Option)
Camera	Option
Ethernet	1 Port(Gigabit)
SD Card	1 Slot(SDHC up to 32GB, SDXC up to 2TB)
Serial Port	4 Ports(RS-232C 3 Ports, RS-485/232C 1 Port)
Extension Port	GPIO(16ch), PWM(2ch), A/D Converter(4ch)
Voltage	DC 9~24V
Operating Temperature	Min. -10℃ / Max. 70℃
Waterproof	IP65 대응
Dimension(mm)	284(H)*179(V)*53.7(D)

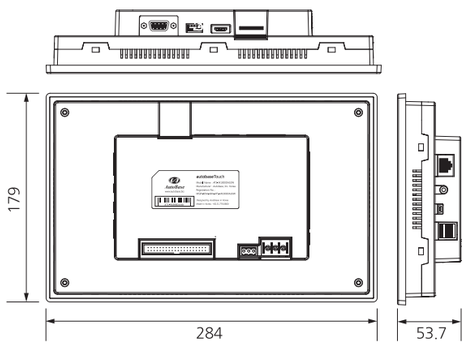

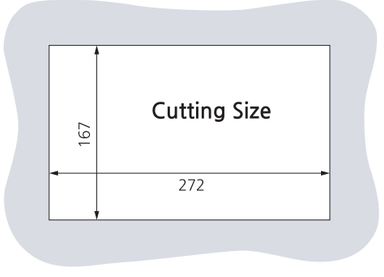

Unit : mm

Autobase Touch Smart
ATS Series Resistive

10.4"

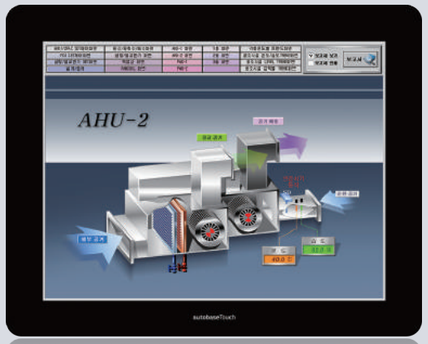

ATS-M1000DA10C

Specifications...

Screen Size	10.4 inch
Screen Resolution	800*600
Touch Screen	4 Wire Resistive
CPU	Cortex A9 Dual 1,000MHz
Memory	DRAM 512MB DDR3, NAND Flash 512MB (Option : DRAM 1GB DDR3, NAND Flash 1GB)
OS	Windows Compact 7(CE 7)
USB	USB Host 2 Ports, USB Device 1 Port
Audio	Speaker embedded, Stereo audio out(Ø3.5), 1 Mic(Option)
Camera	Option
Ethernet	1 Port(Gigabit)
SD Card	1 Slot(SDHC up to 32GB, SDXC up to 2TB)
Serial Port	4 Ports(RS-232C 3 Ports, RS-485/232C 1 Port)
Extension Port	GPIO(16ch), PWM(2ch), A/D Converter(4ch)
Voltage	DC 9~24V
Operating Temperature	Min. -10℃ / Max. 70℃
Waterproof	IP65 대응
Dimension(mm)	261.6(H)*208.8(V)*42.84(D)

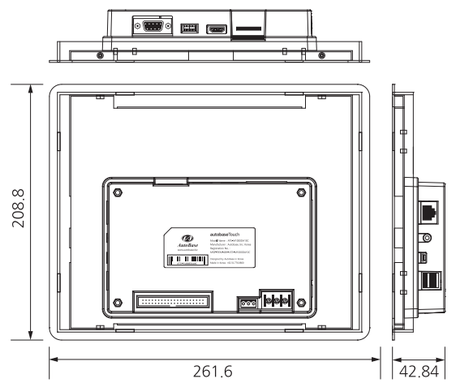

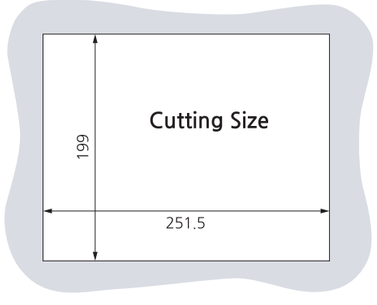

Unit : mm

Autobase Touch Smart
ATS Series Resistive

12.1"

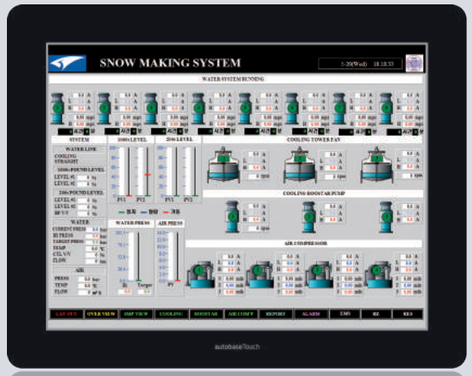

ATS-M1000DA12C2

Specifications...

Screen Size	12.1 inch
Screen Resolution	1024*768
Touch Screen	4 Wire Resistive
CPU	Cortex A9 Dual 1,000MHz
Memory	DRAM 512MB DDR3, NAND Flash 512MB (Option : DRAM 1GB DDR3, NAND Flash 1GB)
OS	Windows Compact 7(CE 7)
USB	USB Host 2 Ports, USB Device 1 Port
Audio	Speaker embedded, Stereo audio output(Ø3.5), 1 Mic(Option)
Camera	Option
Ethernet	1 Port(Gigabit)
SD Card	1 Slot(SDHC up to 32GB, SDXC up to 2TB)
Serial Port	4 Ports(RS-232C 3 Ports, RS-485/232C 1 Port)
Extension Port	GPIO(16ch), PWM(2ch), A/D Converter(4ch)
Voltage	DC 12~24V
Operating Temperature	Min. -10℃ / Max. 70℃
Waterproof	IP65 대응
Dimension(mm)	301(H)*238.5(V)*55.7(D)

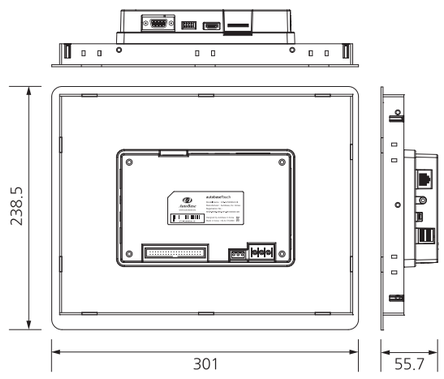

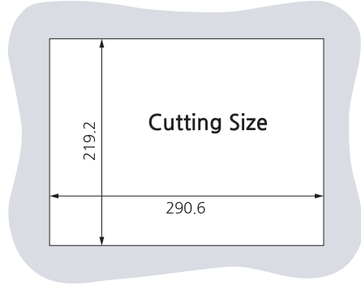

Unit : mm

Autobase Touch Smart
ATS Series Resistive

12.1"

ATS-M1000DA12P3

Specifications...	
Screen Size	12.1 inch
Screen Resolution	800*600
Brightness	1,500 cd/㎡(High Luminance)
Lifetime	100,000 hours
Touch Screen	4 Wire Resistive
CPU	Cortex A9 Dual 1,000MHz
Memory	DRAM 1GB DDR3, NAND Flash 1GB
OS	Windows Compact 7(CE 7)
USB	USB Host 2 Ports, USB Device 1 Port
Audio	Speaker embedded, Stereo audio output(Ø3.5), 1 Mic(Option)
Camera	Option
Ethernet	1 Port(Gigabit)
SD Card	1 Slot(SDHC up to 32GB, SDXC up to 2TB)
Serial Port	4 Ports(RS-232C 3 Ports, RS-485/232C 1 Port)
Extension Port	GPIO(16ch), PWM(2ch), A/D Converter(4ch)
Voltage	DC 12V(Only)
Operating Temperature	Min. -10℃ / Max. 70℃
Waterproof	IP65 대응
Dimension(mm)	295.6(H)*233.79(V)*49.3(D)

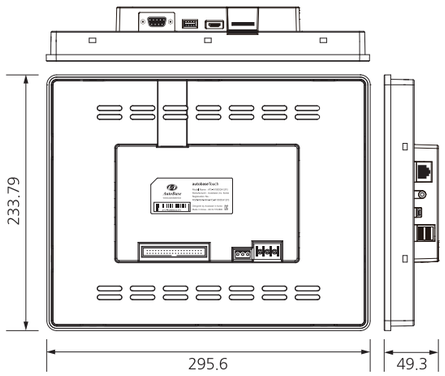

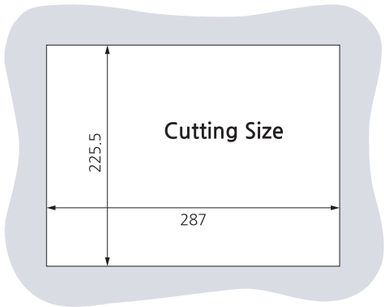

Unit : mm

Autobase Touch Smart
ATS Series Resistive

15"

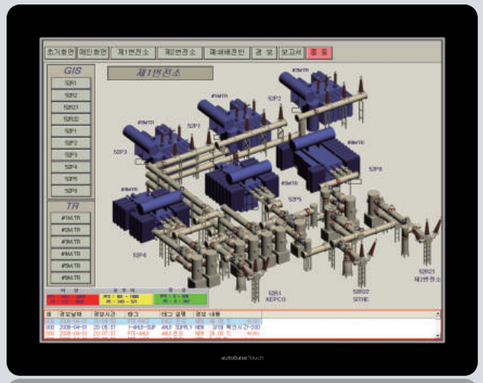

ATS-M1000DA15C

Specifications...	
Screen Size	15 inch
Screen Resolution	1024*768
Touch Screen	4 Wire Resistive
CPU	Cortex A9 Dual 1,000MHz
Memory	DRAM 512MB DDR3, NAND Flash 512MB (Option : DRAM 1GB DDR3, NAND Flash 1GB)
OS	Windows Compact 7(CE 7)
USB	USB Host 2 Ports, USB Device 1 Port
Audio	Speaker embedded, Stereo audio output(Ø3.5), 1 Mic(Option)
Camera	Option
Ethernet	1 Port(Gigabit)
SD Card	1 Slot(SDHC up to 32GB, SDXC up to 2TB)
Serial Port	4 Ports(RS-232C 3 Ports, RS-485/232C 1 Port)
Extension Port	GPIO(16ch), PWM(2ch), A/D Converter(4ch)
Voltage	DC 12~24V
Operating Temperature	Min. -10℃ / Max. 70℃
Waterproof	IP65 대응
Dimension(mm)	350.12(H)*274.1(V)*58.2(D)

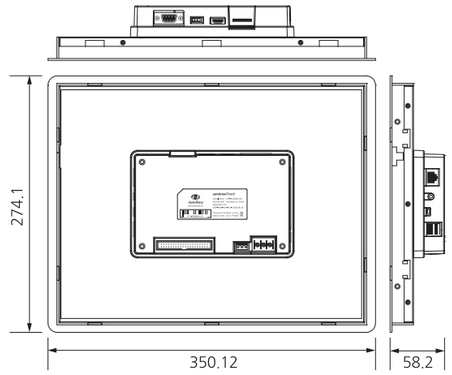

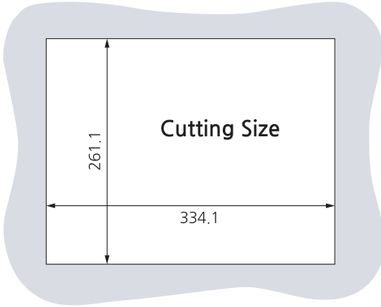

Unit : mm

Autobase Touch Smart
ATS Series Resistive

17"

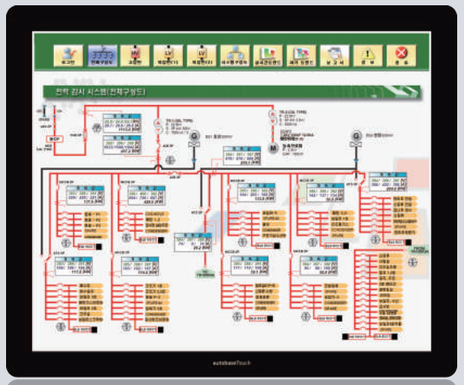

ATS-M1000DA17C

Specifications...	
Screen Size	17 inch
Screen Resolution	1280*1024
Touch Screen	4 Wire Resistive
CPU	Cortex A9 Dual 1,000MHz
Memory	DRAM 512MB DDR3, NAND Flash 512MB (Option : DRAM 1GB DDR3, NAND Flash 1GB)
OS	Windows Compact 7(CE 7)
USB	USB Host 2 Ports, USB Device 1 Port
Audio	Speaker embedded, Stereo audio output(Ø3.5), 1 Mic(Option)
Camera	Option
Ethernet	1 Port(Gigabit)
SD Card	1 Slot(SDHC up to 32GB, SDXC up to 2TB)
Serial Port	4 Ports(RS-232C 3 Ports, RS-485/232C 1 Port)
Extension Port	GPIO(16ch), PWM(2ch), A/D Converter(4ch)
Voltage	DC 12~24V
Operating Temperature	Min. -10℃ / Max. 70℃
Waterproof	IP65 대응
Dimension(mm)	387.92(H)*320.34(V)*64.2(D)

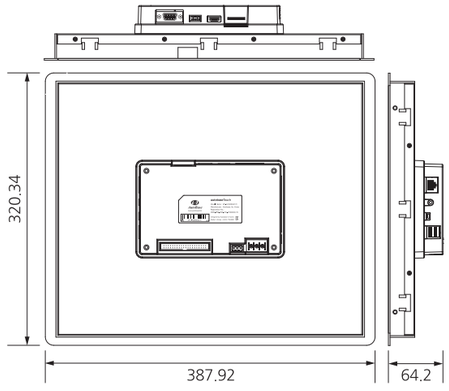

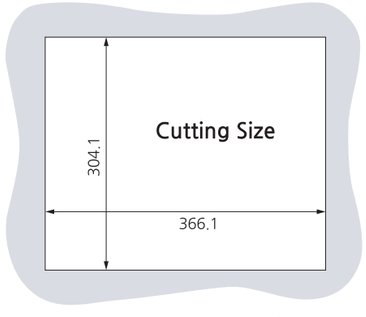

Unit : mm

Autobase Touch Smart
ATS Series Resistive

19"

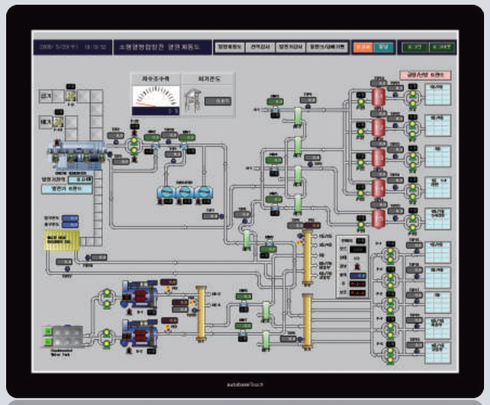

ATS-M1000DA19C

Specifications...	
Screen Size	19 inch
Screen Resolution	1280*1024
Touch Screen	4 Wire Resistive
CPU	Cortex A9 Dual 1,000MHz
Memory	DRAM 512MB DDR3, NAND Flash 512MB (Option : DRAM 1GB DDR3, NAND Flash 1GB)
OS	Windows Compact 7(CE 7)
USB	USB Host 2 Ports, USB Device 1 Port
Audio	Speaker embedded, Stereo audio output(Ø3.5), 1 Mic(Option)
Camera	Option
Ethernet	1 Port(Gigabit)
SD Card	1 Slot(SDHC up to 32GB, SDXC up to 2TB)
Serial Port	4 Ports(RS-232C 3 Ports, RS-485/232C 1 Port)
Extension Port	GPIO(16ch), PWM(2ch), A/D Converter(4ch)
Voltage	DC 12~24V
Operating Temperature	Min. -10℃ / Max. 70℃
Waterproof	IP65 대응
Dimension(mm)	426.32(H)*351.06(V)*64.2(D)

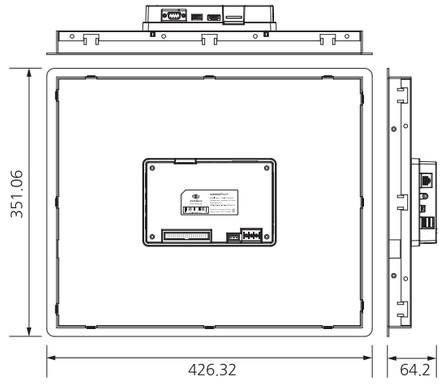

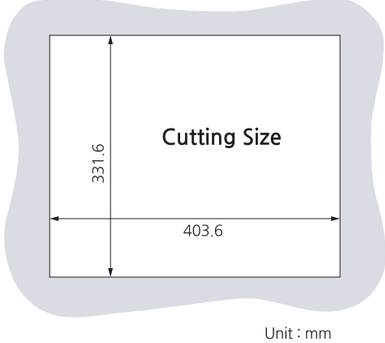

Unit : mm

Autobase Touch Smart
ATS Series Resistive

24"

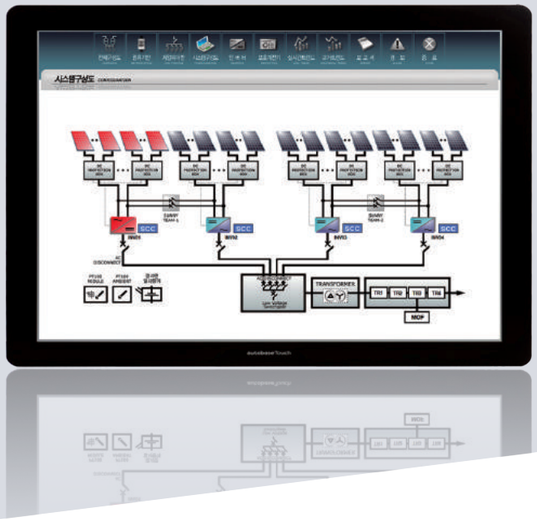

ATS-M1000DA24C

Specifications...	
Screen Size	24 inch
Screen Resolution	1920*1080
Touch Screen	4 Wire Resistive
CPU	Cortex A9 Dual 1,000MHz
Memory	DRAM 512MB DDR3, NAND Flash 512MB (Option : DRAM 1GB DDR3, NAND Flash 1GB)
OS	Windows Compact 7(CE 7)
USB	USB Host 2 Ports, USB Device 1 Port
Audio	Speaker embedded, Stereo audio output(Ø3.5), 1 Mic(Option)
Camera	Option
Ethernet	1 Port(Gigabit)
SD Card	1 Slot(SDHC up to 32GB, SDXC up to 2TB)
Serial Port	4 Ports(RS-232C 3 Ports, RS-485/232C 1 Port)
Extension Port	GPIO(16ch), PWM(2ch), A/D Converter(4ch)
Voltage	DC 12~24V
Operating Temperature	Min. -10℃ / Max. 70℃
Waterproof	IP65 대응
Dimension(mm)	586.36(H)*353.89(V)*68.2(D)

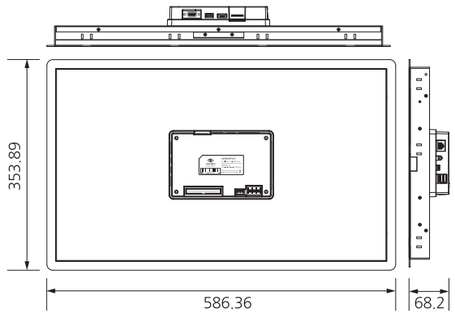

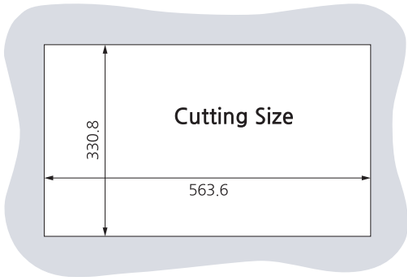

Unit : mm

Autobase Touch Smart
ATS Series Capacitive

8"

ATS-M1000DA08A2

Specifications...	
Screen Size	8 inch
Screen Resolution	800*480
Brightness	1,000cd/㎡(High Luminance)
Lifetime	100,000hours(Typical, 25℃)
Touch Screen	Capacitive Multi Touch(Tempered Glass, AG lamination), Ball Drop Test UL60950 충족, (Glass Thickness : 2.8mm)
CPU	Cortex A9 DualCore 1GHz
Memory	DRAM 1GB DDR3, NAND Flash 1GB
OS	Windows CE 7.0 or Linux QT
USB	USB Host 2 Ports, USB Device 1 Port
Audio	Speaker embedded, Stereo audio output(Ø3.5), 1 Mic(Option)
Camera	Option
Ethernet	1 Port(1000Mb/100Mb)
SD Card	1 Slot(SDHC up to 32GB, SDXC up to 2TB)
Serial Port	4 Ports(RS-232C 3 Ports, RS-485/232C 1 Port)
Extension Port	GPIO(16ch), PWM(2ch), A/D Converter(4ch)
Voltage	DC 12V(Only)
Operating Temperature	Min. -20℃ / Max. 70℃
Waterproof	IP65 대응
Dimension(mm)	225(H)*155(V)*59.2(D)

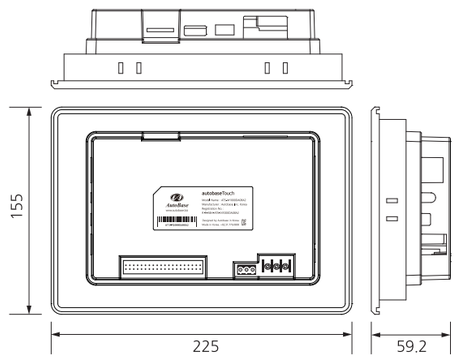

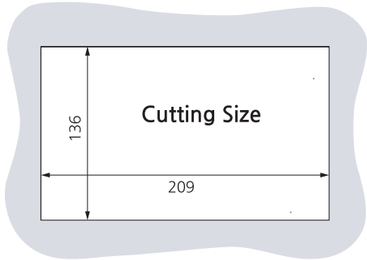

Unit : mm

Autobase Touch Smart
ATS Series Capacitive

12.1"

ATS-M1000DA12A3

Specifications...	
Screen Size	12.1 inch
Screen Resolution	800*600
Brightness	1,200cd/㎡(High Luminance)
Lifetime	100,000hours(Typical, 25℃)
Touch Screen	Capacitive Multi Touch(Tempered Glass, AG lamination), Ball Drop Test UL60950 충족, (Glass Thickness : 1.8mm)
CPU	Cortex A9 DualCore 1GHz
Memory	DRAM 1GB DDR3, NAND Flash 1GB
OS	Windows CE 7.0 or Linux QT
USB	USB Host 2 Ports, USB Device 1 Port
Audio	Speaker embedded, Stereo audio output(Ø3.5), 1 Mic(Option)
Camera	Option
Ethernet	1 Port(1000Mb/100Mb)
SD Card	1 Slot(SDHC up to 32GB, SDXC up to 2TB)
Serial Port	4 Ports(RS-232C 3 Ports, RS-485/232C 1 Port)
Extension Port	GPIO(16ch), PWM(2ch), A/D Converter(4ch)
Voltage	DC 12V(Only)
Operating Temperature	Min. -20℃ / Max. 70℃
Waterproof	IP65 대응
Dimension(mm)	294(H)*236(V)*58.2(D)

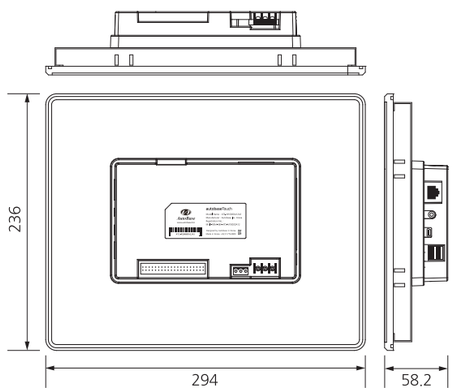

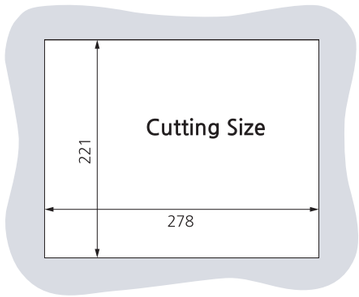

Unit : mm

Autobase Touch Smart
ATS Series Capacitive

24"

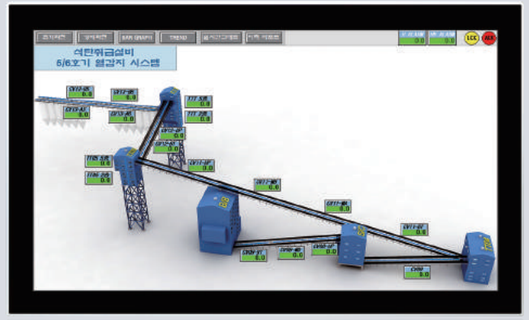

ATS-M1000DA24A2

Specifications...	
Screen Size	24 inch
Screen Resolution	1920*1080
Brightness	1,000cd/㎡(High Luminance)
Lifetime	50,000hours(Typical, 25℃)
Touch Screen	Capacitive Multi Touch(Tempered Glass, AG lamination), Ball Drop Test UL60950 충족, (Glass Thickness : 3mm)
CPU	Cortex A9 DualCore 1GHz
Memory	DRAM 1GB DDR3, NAND Flash 1GB
OS	Windows CE 7.0 or Linux QT
USB	USB Host 2 Ports, USB Device 1 Port
Audio	Speaker embedded, Stereo audio output(Ø3.5), 1 Mic(Option)
Camera	Option
Ethernet	1 Port(1000Mb/100Mb)
SD Card	1 Slot(SDHC up to 32GB, SDXC up to 2TB)
Serial Port	4 Ports(RS-232C 3 Ports, RS-485/232C 1 Port)
Extension Port	GPIO(16ch), PWM(2ch), A/D Converter(4ch)
Voltage	DC 12V(Only)
Operating Temperature	Min. -20℃ / Max. 70℃
Waterproof	IP65 대응
Dimension(mm)	595.2(H)*362.2(V)*66.2(D)

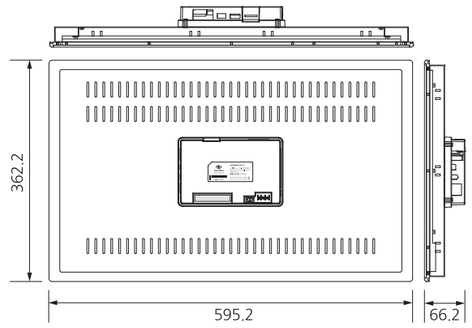

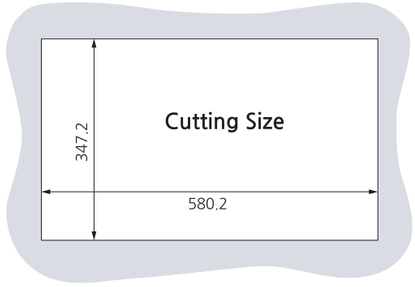

Unit : mm

Autobase Touch Basic
ATB Series

7"

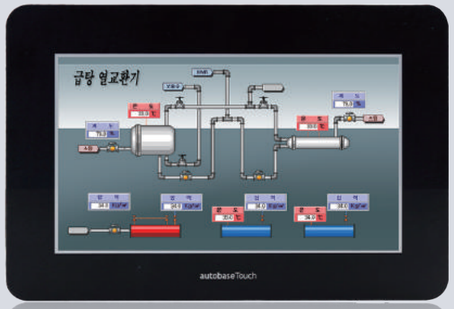

ATB-1A07C

Specifications...	
Screen Size	7 inch
Screen Resolution	800*480
Main Board	CH8M
Touch Screen	Pen Mount 4 wire USB Controller
Graphic Controller	Intel HD Controller
CPU	Intel ATOM Bay-Trail E3825 Dual core 1.33 GHz
Memory	DDR3L 4GB(1333MHz)
SSD(Option)	mSATA 128GB(Max Read:500MB/s Write:450MB/s) mSATA 256GB(Max Read:500MB/s Write:450MB/s)
OS(Option)	Windows 7(Windows Embedded Standard 7) or Windows 10
USB	USB 2.0 1 Port, USB 3.0 1 Port
HDMI	1 Port
Ethernet	Dual Gigabit Ethernet LAN 1 Ports(10/100/1000Mbits/s)
Serial/Printer Port	RS-232C 1 Port
Keyboard/Mouse	USB Type
CD-ROM	No
Utility(Option)	UWF(OS Protection), Recovery(Factory Reset) Software
Voltage	DC 12V 3.5A
Waterproof	IP65 대응
Weight(g)	1,180
Dimension(mm)	202(H)*134(V)*46.4(D)

Storage Option...	
mSATA 256GB	Replace mSATA 128GB with 256GB

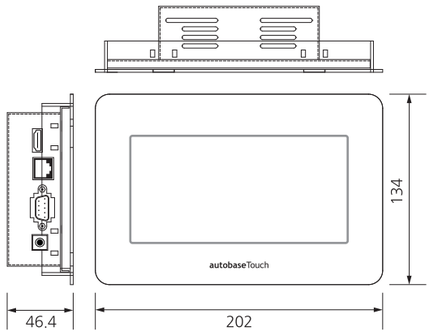

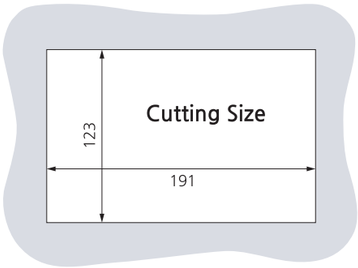

Unit : mm

Autobase Touch Basic
ATB Series

8"

ATB-1A08C

Specifications...	
Screen Size	8 inch
Screen Resolution	800*600
Main Board	CH8M
Touch Screen	Pen Mount 4 wire USB Controller
Graphic Controller	Intel HD Controller
CPU	Intel ATOM Bay-Trail E3825 Dual core 1.33 GHz
Memory	DDR3L 4GB(1333MHz)
SSD(Option)	mSATA 128GB(Max Read:500MB/s Write:450MB/s) mSATA 256GB(Max Read:500MB/s Write:450MB/s)
OS(Option)	Windows 7(Windows Embedded Standard 7) or Windows 10
USB	USB 2.0 1 Port, USB 3.0 1 Port
HDMI	1 Port
Ethernet	Dual Gigabit Ethernet LAN 1 Ports(10/100/1000Mbits/s)
Serial/Printer Port	RS-232C 1 Port
Keyboard/Mouse	USB Type
CD-ROM	No
Utility(Option)	UWF(OS Protection), Recovery(Factory Reset) Software
Voltage	DC 12V 3.5A
Waterproof	IP65 대응
Weight(g)	1,210
Dimension(mm)	209(H)*168.5(V)*46.6(D)

Storage Option...	
mSATA 256GB	Replace mSATA 128GB with 256GB

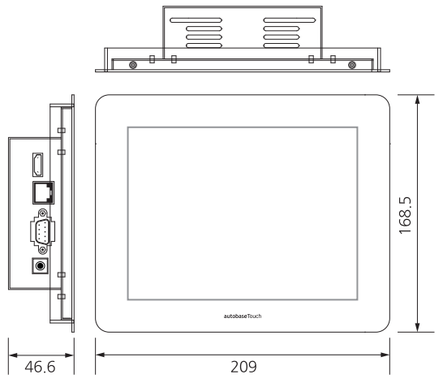

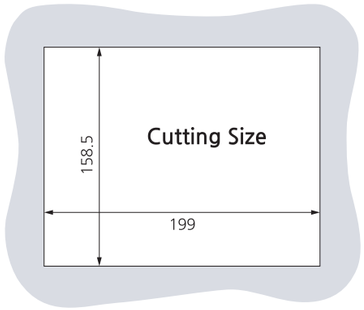

Unit : mm

Autobase Touch Basic

ATB Series

10.4"

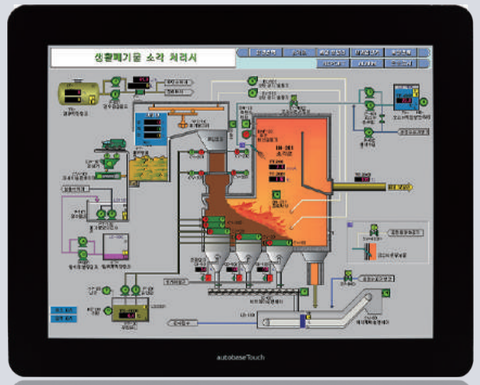

ATB-1A10C

Specifications...	
Screen Size	10.4 inch
Screen Resolution	800*600
Main Board	CH8M
Touch Screen	Pen Mount 4 wire USB Controller
Graphic Controller	Intel HD Controller
CPU	Intel ATOM Bay-Trail E3825 Dual core 1.33 GHz
Memory	DDR3L 4GB(1333MHz)
SSD(Option)	mSATA 128GB(Max Read:500MB/s Write:450MB/s) mSATA 256GB(Max Read:500MB/s Write:450MB/s)
OS(Option)	Windows 7(Windows Embedded Standard 7) or Windows 10
USB	USB 2.0 1 Port, USB 3.0 1 Port
HDMI	1 Port
Ethernet	Dual Gigabit Ethernet LAN 1 Ports(10/100/1000Mbits/s)
Serial/Printer Port	RS-232C 1 Port
Keyboard/Mouse	USB Type
CD-ROM	No
Utility(Option)	UWF(OS Protection), Recovery(Factory Reset) Software
Voltage	DC 12V 3.5A
Waterproof	IP65 대응
Weight(g)	1,620
Dimension(mm)	261.6(H)*208.8(V)*42.8(D)

Storage Option...	
mSATA 256GB	Replace mSATA 128GB with 256GB

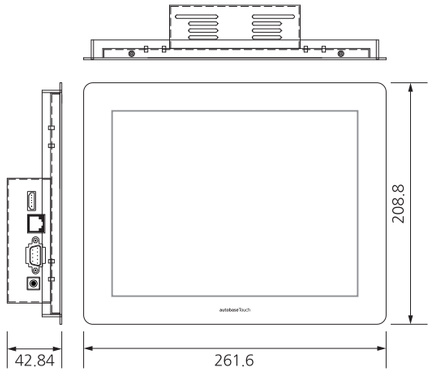

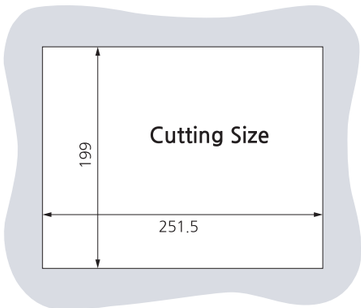

Unit : mm

Autobase Touch Basic

ATB Series

12.1"

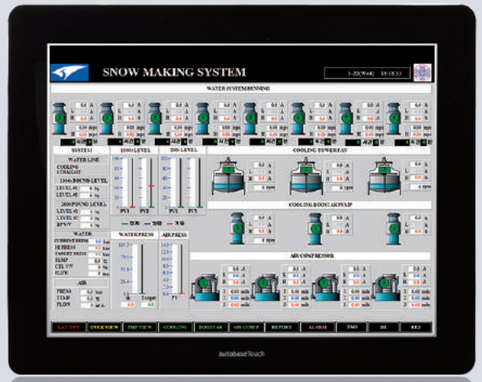

ATB-1A12C2

Specifications...	
Screen Size	12.1 inch
Screen Resolution	1024*768
Main Board	CH8M
Touch Screen	Pen Mount 4 wire USB Controller
Graphic Controller	Intel HD Controller
CPU	Intel ATOM Bay-Trail E3825 Dual core 1.33 GHz
Memory	DDR3L 4GB(1333MHz)
SSD(Option)	mSATA 128GB(Max Read:500MB/s Write:450MB/s) mSATA 256GB(Max Read:500MB/s Write:450MB/s)
OS(Option)	Windows 7(Windows Embedded Standard 7) or Windows 10
USB	USB 2.0 1 Port, USB 3.0 1 Port
HDMI	1 Port
Ethernet	Dual Gigabit Ethernet LAN 1 Ports(10/100/1000Mbits/s)
Serial/Printer Port	RS-232C 1 Port
Keyboard/Mouse	USB Type
CD-ROM	No
Utility(Option)	UWF(OS Protection), Recovery(Factory Reset) Software
Voltage	DC 12V 3.5A
Waterproof	IP65 대응
Weight(g)	2,310
Dimension(mm)	301(H)*238.5(V)*59.9(D)

Storage Option...	
mSATA 256GB	Replace mSATA 128GB with 256GB

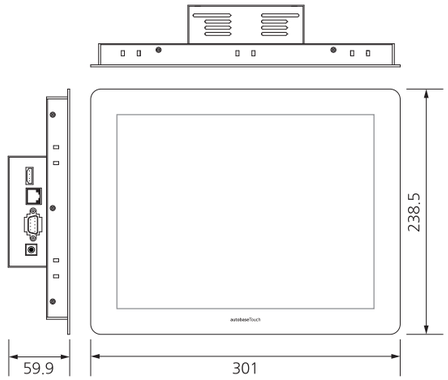

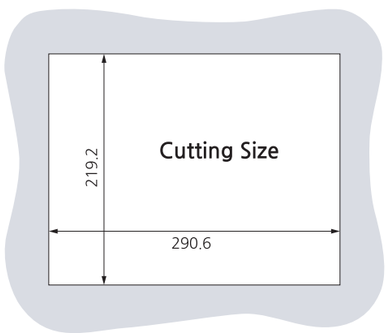

Unit : mm

Autobase Touch Basic

ATB Series

15"

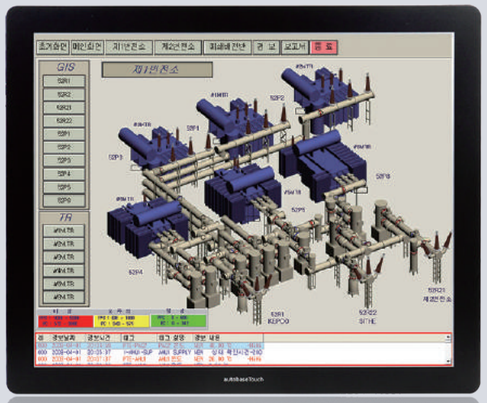

ATB-1A15C

Specifications...	
Screen Size	15 inch
Screen Resolution	1024*768
Main Board	CH8M
Touch Screen	Pen Mount 4 wire USB Controller
Graphic Controller	Intel HD Controller
CPU	Intel ATOM Bay-Trail E3825 Dual core 1.33 GHz
Memory	DDR3L 4GB(1333MHz)
SSD(Option)	mSATA 128GB(Max Read:500MB/s Write:450MB/s) mSATA 256GB(Max Read:500MB/s Write:450MB/s)
OS(Option)	Windows 7(Windows Embedded Standard 7) or Windows 10
USB	USB 2.0 1 Port, USB 3.0 1 Port
HDMI	1 Port
Ethernet	Dual Gigabit Ethernet LAN 1 Ports(10/100/1000Mbits/s)
Serial/Printer Port	RS-232C 1 Port
Keyboard/Mouse	USB Type
CD-ROM	No
Utility(Option)	UWF(OS Protection), Recovery(Factory Reset) Software
Voltage	DC 12V 3.5A
Waterproof	IP65 대응
Weight(g)	3,080
Dimension(mm)	350.12(H)*274.1(V)*62.4(D)

Storage Option...	
mSATA 256GB	Replace mSATA 128GB with 256GB

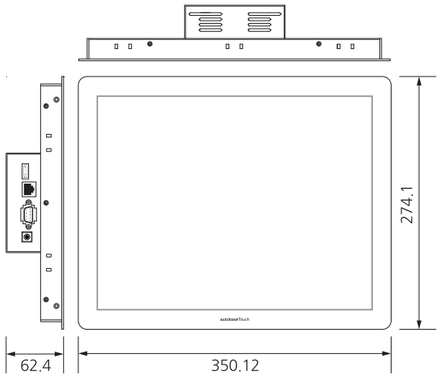

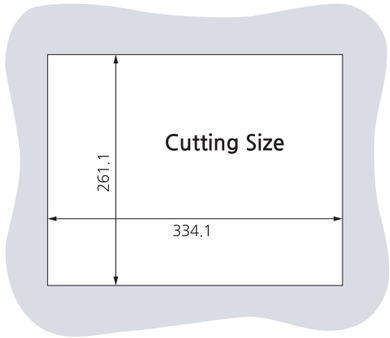

Unit : mm

Autobase Touch Basic

ATB Series

17"

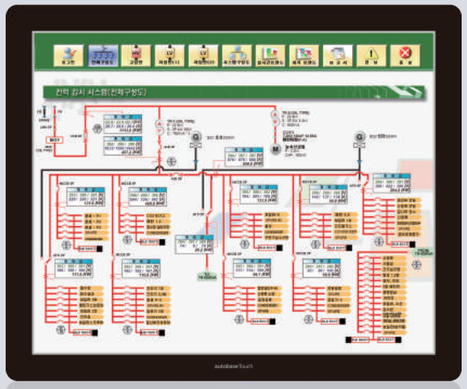

ATB-1A17C

Specifications...	
Screen Size	17 inch
Screen Resolution	1280*1024
Main Board	CH8M
Touch Screen	Pen Mount 4 wire USB Controller
Graphic Controller	Intel HD Controller
CPU	Intel ATOM Bay-Trail E3825 Dual core 1.33 GHz
Memory	DDR3L 4GB(1333MHz)
SSD(Option)	mSATA 128GB(Max Read:500MB/s Write:450MB/s) mSATA 256GB(Max Read:500MB/s Write:450MB/s)
OS(Option)	Windows 7(Windows Embedded Standard 7) or Windows 10
USB	USB 2.0 1 Port, USB 3.0 1 Port
HDMI	1 Port
Ethernet	Dual Gigabit Ethernet LAN 1 Ports(10/100/1000Mbits/s)
Serial/Printer Port	RS-232C 1 Port
Keyboard/Mouse	USB Type
CD-ROM	No
Utility(Option)	UWF(OS Protection), Recovery(Factory Reset) Software
Voltage	DC 12V 3.5A
Waterproof	IP65 대응
Weight(g)	4,100
Dimension(mm)	387.92(H)*320.34(V)*68.4(D)

Storage Option...	
mSATA 256GB	Replace mSATA 128GB with 256GB

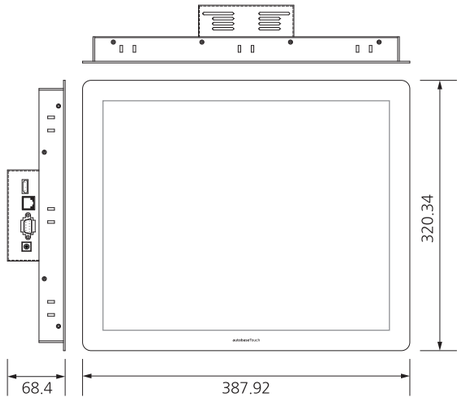

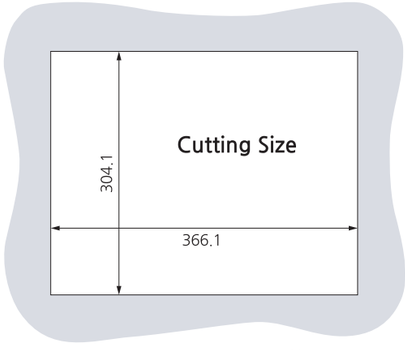

Unit : mm

Autobase Touch Basic

ATB Series

19"

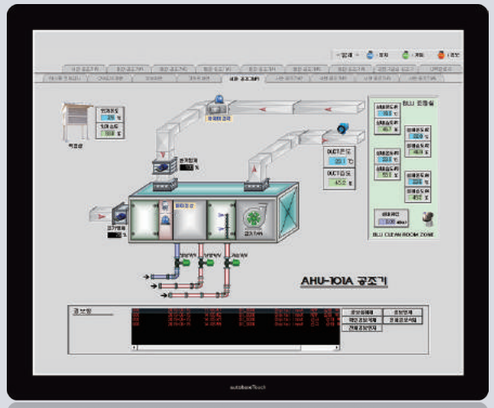

ATB-1A19C

Specifications...

Screen Size	19 inch
Screen Resolution	1280*1024
Main Board	CH8M
Touch Screen	Pen Mount 4 wire USB Controller
Graphic Controller	Intel HD Controller
CPU	Intel ATOM Bay-Trail E3825 Dual core 1.33 GHz
Memory	DDR3L 4GB(1333MHz)
SSD(Option)	mSATA 128GB(Max Read:500MB/s Write:450MB/s) mSATA 256GB(Max Read:500MB/s Write:450MB/s)
OS(Option)	Windows 7(Windows Embedded Standard 7) or Windows 10
USB	USB 2.0 1 Port, USB 3.0 1 Port
HDMI	1 Port
Ethernet	Dual Gigabit Ethernet LAN 1 Ports(10/100/1000Mbits/s)
Serial/Printer Port	RS-232C 1 Port
Keyboard/Mouse	USB Type
CD-ROM	No
Utility(Option)	UWF(OS Protection), Recovery(Factory Reset) Software
Voltage	DC 12V 3.5A
Waterproof	IP65 대응
Weight(g)	4,770
Dimension(mm)	426.24(H)*351.06(V)*68.4(D)

Storage Option...

mSATA 256GB	Replace mSATA 128GB with 256GB

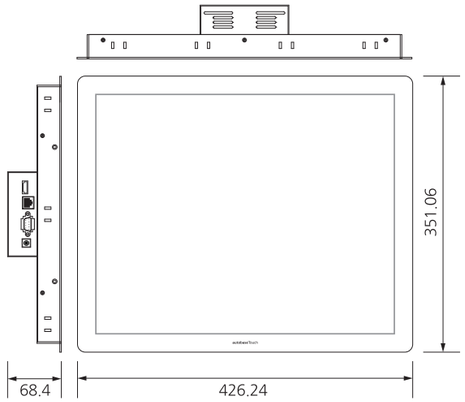

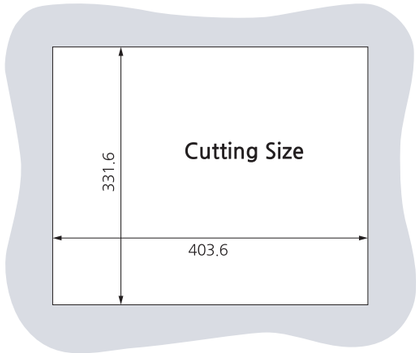

Unit : mm

Autobase Touch Basic

ATB Series

24"

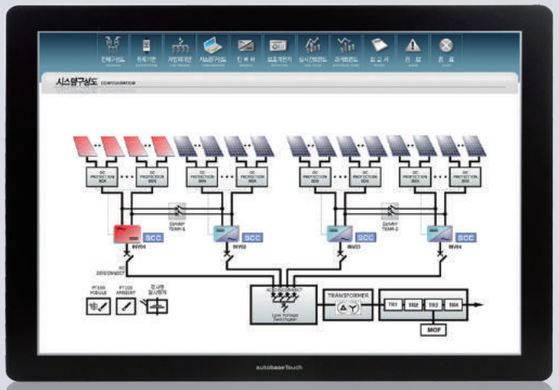

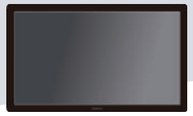

ATB-1A24C

Specifications...

Screen Size	24 inch
Screen Resolution	1920*1080
Main Board	CH8M
Touch Screen	Pen Mount 4 wire USB Controller
Graphic Controller	Intel HD Controller
CPU	Intel ATOM Bay-Trail E3825 Dual core 1.33 GHz
Memory	DDR3L 4GB(1333MHz)
SSD(Option)	mSATA 128GB(Max Read:500MB/s Write:450MB/s) mSATA 256GB(Max Read:500MB/s Write:450MB/s)
OS(Option)	Windows 7(Windows Embedded Standard 7) or Windows 10
USB	USB 2.0 1 Port, USB 3.0 1 Port
HDMI	1 Port
Ethernet	Dual Gigabit Ethernet LAN 1 Ports(10/100/1000Mbits/s)
Serial/Printer Port	RS-232C 1 Port
Keyboard/Mouse	USB Type
CD-ROM	No
Utility(Option)	UWF(OS Protection), Recovery(Factory Reset) Software
Voltage	DC 12V 3.5A
Waterproof	IP65 대응
Weight(g)	6,000
Dimension(mm)	586.36(H)*353.89(V)*72.4(D)

Storage Option...

mSATA 256GB	Replace mSATA 128GB with 256GB

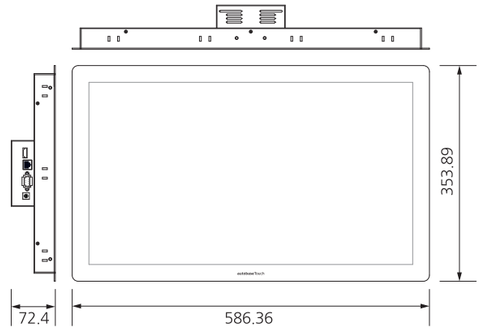

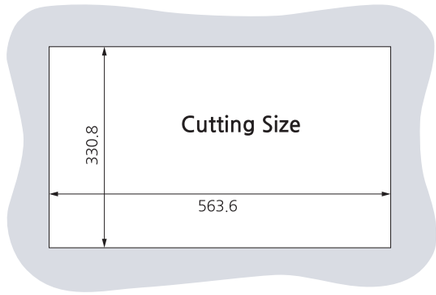

Unit : mm

Autobase Touch Medium
ATM Series Resistive

12.1"

ATM-3C12C2

Specifications...	
Screen Size	12.1 inch
Screen Resolution	1024*768
Touch Screen	PenMount 4 wire USB controller
Graphic Controller	Intel HD Controller
CPU	Intel Celeron N3450 1.1GHz Quad Core(Max 2.2GHz)
Memory	DDR3L 1333MHz 4GB or 8GB
SSD	mSATA 128GB(Max Read : 500MB/s, Write : 450MB/s) mSATA 256GB(Max Read : 500MB/s, Write : 450MB/s)
OS	Windows 10 IoT Enterprise(32/64bit)
USB	USB 3.0 2 Ports
HDMI	1 Port
VGA	1 Port
Ethernet	Gigabit Ethernet 2 Ports(10/100/1000Mbits/s)
Serial/Printer Port	RS-232C 4 Ports(selectable RS422/485 2 Ports)
Keyboard/Mouse	USB Type
CD-ROM	No
Utility	UWF(OS Protection), Recovery(Factory Reset) Software Winclon
Voltage	DC 12V
Waterproof	IP65 대응
Weight(g)	2,890
Dimension(mm)	301(H)*238.5(V)*69.5(D)

Storage Option...	
mSATA 256GB	Replace mSATA 128GB with 256GB

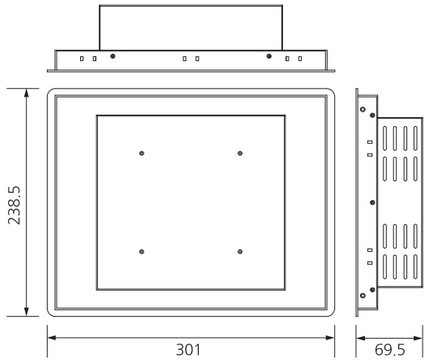

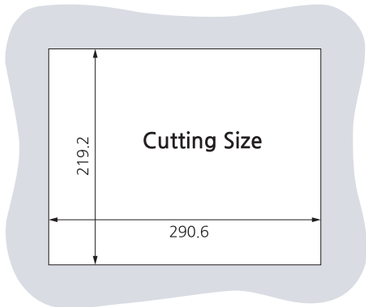

Unit : mm

Autobase Touch Medium
ATM Series Resistive

15"

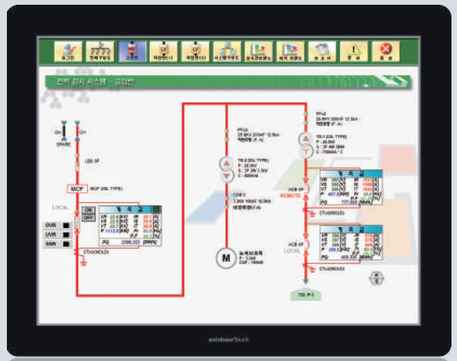

ATM-3C15C

Specifications...	
Screen Size	15 inch
Screen Resolution	1024*768
Touch Screen	PenMount 4 wire USB controller
Graphic Controller	Intel HD Controller
CPU	Intel Celeron N3450 1.1GHz Quad Core(Max 2.2GHz)
Memory	DDR3L 1333MHz 4GB or 8GB
SSD	mSATA 128GB(Max Read : 500MB/s, Write : 450MB/s) mSATA 256GB(Max Read : 500MB/s, Write : 450MB/s)
OS	Windows 10 IoT Enterprise(32/64bit)
USB	USB 3.0 2 Ports
HDMI	1 Port
VGA	1 Port
Ethernet	Gigabit Ethernet 2 Ports(10/100/1000Mbits/s)
Serial/Printer Port	RS-232C 4 Ports(selectable RS422/485 2 Ports)
Keyboard/Mouse	USB Type
CD-ROM	No
Utility	UWF(OS Protection), Recovery(Factory Reset) Software Winclon
Voltage	DC 12V
Waterproof	IP65 대응
Weight(g)	3,680
Dimension(mm)	350.12(H)*274.1(V)*72(D)

Storage Option...	
mSATA 256GB	Replace mSATA 128GB with 256GB

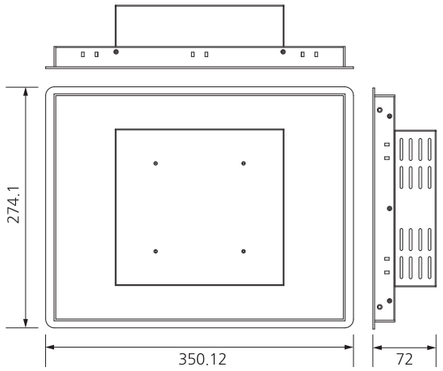

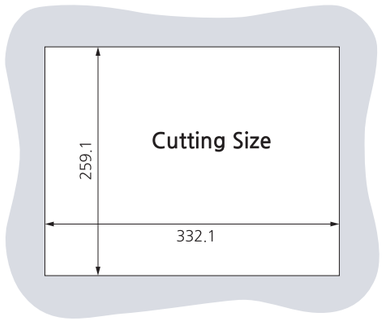

Unit : mm

Autobase Touch Medium

ATM Series Resistive

17"

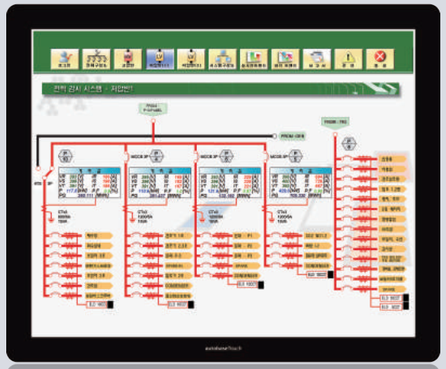

ATM-3C17C

Specifications...	
Screen Size	17 inch
Screen Resolution	1280*1024
Touch Screen	PenMount 4 wire USB controller
Graphic Controller	Intel HD Controller
CPU	Intel Celeron N3450 1.1GHz Quad Core(Max 2.2GHz)
Memory	DDR3L 1333MHz 4GB or 8GB
SSD	mSATA 128GB(Max Read : 500MB/s, Write : 450MB/s) mSATA 256GB(Max Read : 500MB/s, Write : 450MB/s)
OS	Windows 10 IoT Enterprise(32/64bit)
USB	USB 3.0 2 Ports
HDMI	1 Port
VGA	1 Port
Ethernet	Gigabit Ethernet 2 Ports(10/100/1000Mbits/s)
Serial/Printer Port	RS-232C 4 Ports(selectable RS422/485 2 Ports)
Keyboard/Mouse	USB Type
CD-ROM	No
Utility	UWF(OS Protection), Recovery(Factory Reset) Software Winclon
Voltage	DC 12V
Waterproof	IP65 대응
Weight(g)	4,680
Dimension(mm)	387.92(H)*320.34(V)*78(D)

Storage Option...	
mSATA 256GB	Replace mSATA 128GB with 256GB

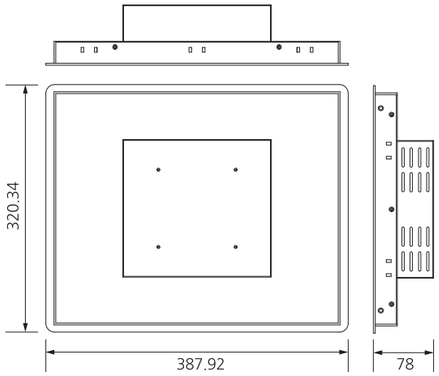

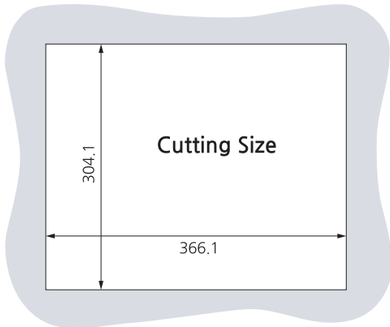

Unit : mm

Autobase Touch Medium

ATM Series Resistive

19"

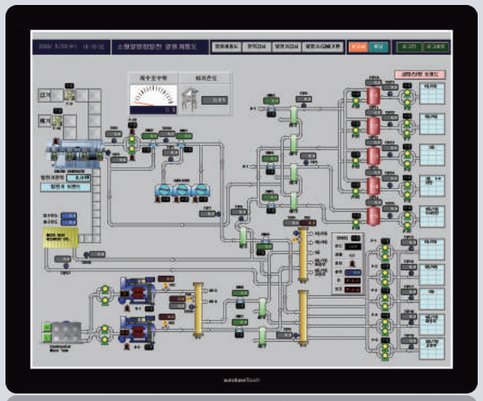

ATM-3C19C

Specifications...	
Screen Size	19 inch
Screen Resolution	1280*1024
Touch Screen	PenMount 4 wire USB controller
Graphic Controller	Intel HD Controller
CPU	Intel Celeron N3450 1.1GHz Quad Core(Max 2.2GHz)
Memory	DDR3L 1333MHz 4GB or 8GB
SSD	mSATA 128GB(Max Read : 500MB/s, Write : 450MB/s) mSATA 256GB(Max Read : 500MB/s, Write : 450MB/s)
OS	Windows 10 IoT Enterprise(32/64bit)
USB	USB 3.0 2 Ports
HDMI	1 Port
VGA	1 Port
Ethernet	Gigabit Ethernet 2 Ports(10/100/1000Mbits/s)
Serial/Printer Port	RS-232C 4 Ports(selectable RS422/485 2 Ports)
Keyboard/Mouse	USB Type
CD-ROM	No
Utility	UWF(OS Protection), Recovery(Factory Reset) Software Winclon
Voltage	DC 12V
Waterproof	IP65 대응
Weight(g)	5,360
Dimension(mm)	426.24(H)*351.06(V)*78(D)

Storage Option...	
mSATA 256GB	Replace mSATA 128GB with 256GB

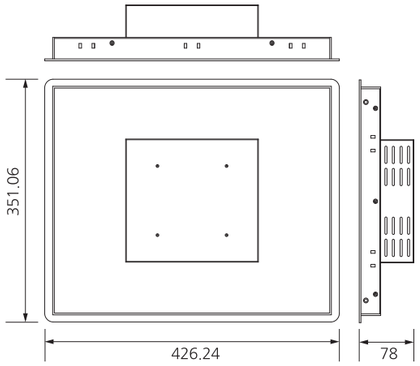

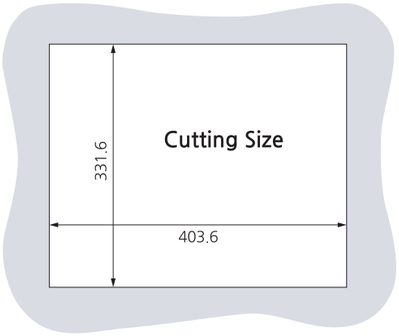

Unit : mm

Autobase Touch Medium
ATM Series Resistive

24"

ATM-3C24C

Specifications...	
Screen Size	24 inch
Screen Resolution	1920*1080
Touch Screen	PenMount 4 wire USB controller
Graphic Controller	Intel HD Controller
CPU	Intel Celeron N3450 1.1GHz Quad Core(Max 2.2GHz)
Memory	DDR3L 1333MHz 4GB or 8GB
SSD	mSATA 128GB(Max Read : 500MB/s, Write : 450MB/s) mSATA 256GB(Max Read : 500MB/s, Write : 450MB/s)
OS	Windows 10 IoT Enterprise(32/64bit)
USB	USB 3.0 2 Ports
HDMI	1 Port
VGA	1 Port
Ethernet	Gigabit Ethernet 2 Ports(10/100/1000Mbits/s)
Serial/Printer Port	RS-232C 4 Ports(selectable RS422/485 2 Ports)
Keyboard/Mouse	USB Type
CD-ROM	No
Utility	UWF(OS Protection), Recovery(Factory Reset) Software Winclon
Voltage	DC 12V
Waterproof	IP65 대응
Weight(g)	6,580
Dimension(mm)	586.36(H)*353.89(V)*82(D)

Storage Option...	
mSATA 256GB	Replace mSATA 128GB with 256GB

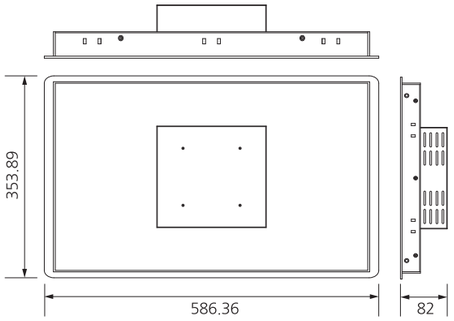

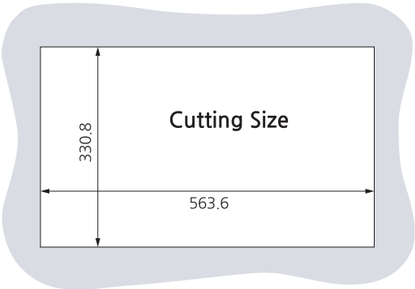

Unit : mm

Autobase Touch Medium
ATM Series Capacitive

8"

ATM-3C08A2

Specifications...	
Screen Size	8 inch
Screen Resolution	800*480
Brightness	1,000cd/㎡(High Luminance)
Lifetime	100,000hours(Typical, 25℃)
Touch Screen	Capacitive Multi Touch(Tempered Glass, AG lamination), Ball Drop Test UL60950 충족, (Glass Thickness : 2.8mm)
Graphic Controller	Intel HD Controller
CPU	Intel Celeron N3450 1.1GHz Quad Core(Max 2.2GHz)
Memory	DDR3 4GB
SSD	mSATA 128GB(Max Read : 500MB/s, Write : 450MB/s) mSATA 256GB(Max Read : 500MB/s, Write : 450MB/s)
OS	Windows 10 or Linux
USB	Host 2 Ports
Ethernet	2 Ports(1000/100/10 Mb)
Serial/Printer Port	3 Ports(RS-232C 2 Ports, RS485 1 Port)
Keyboard/Mouse	USB Type
CD-ROM	No
Utility	UWF(OS Protection), Recovery(Factory Reset) Software
Voltage	DC 12V(Only)
Waterproof	IP65 대응
Dimension(mm)	225(H)*155(V)*73(D)

Storage Option...	
mSATA 256GB	Replace mSATA 128GB with 256GB

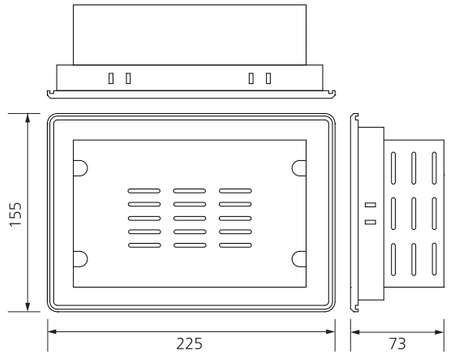

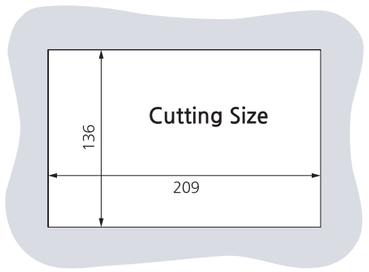

Unit : mm

Autobase Touch Medium
ATM Series Capacitive

12.1"

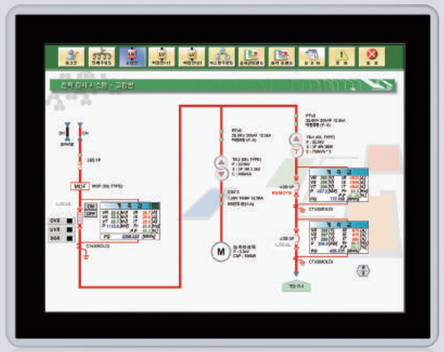

ATM-3C12A3

Specifications...	
Screen Size	12.1 inch
Screen Resolution	800*600
Brightness	1,200cd/㎡(High Luminance)
Lifetime	100,000hours(Typical, 25℃)
Touch Screen	Capacitive Multi Touch(Tempered Glass, AG lamination), Ball Drop Test UL60950 충족, (Glass Thickness : 1.8mm)
Graphic Controller	Intel HD Controller
CPU	Intel Celeron N3450 1.1GHz Quad Core(Max 2.2GHz)
Memory	DDR3 4GB
SSD	mSATA 128GB(Max Read : 500MB/s, Write : 450MB/s) mSATA 256GB(Max Read : 500MB/s, Write : 450MB/s)
OS	Windows 10 or Linux
USB	Host 2 Ports
Ethernet	2 Ports(1000/100/10 Mb)
Serial/Printer Port	3 Ports(RS-232C 2 Ports, RS485 1 Port)
Keyboard/Mouse	USB Type
CD-ROM	No
Utility	UWF(OS Protection), Recovery(Factory Reset) Software
Voltage	DC 12V(Only)
Waterproof	IP65 대응
Dimension(mm)	297(H)*236(V)*67.5(D)

Storage Option...	
mSATA 256GB	Replace mSATA 128GB with 256GB

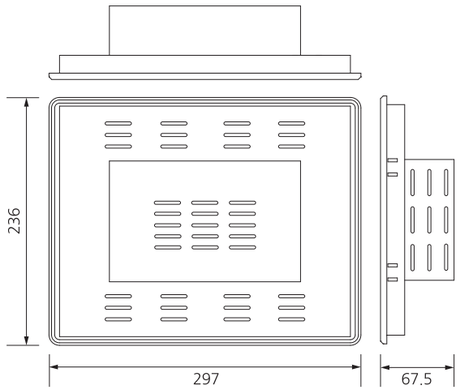

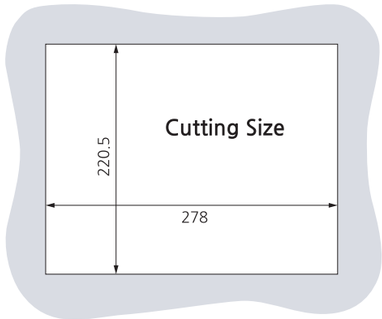

Unit : mm

ATM Series

Autobase Touch Medium
ATM Series Capacitive

24"

ATM-3C24A2

Specifications...	
Screen Size	24 inch
Screen Resolution	1920*1080
Brightness	1,000cd/㎡(High Luminance)
Lifetime	50,000hours(Typical, 25℃)
Touch Screen	Capacitive Multi Touch(Tempered Glass, AG lamination), Ball Drop Test UL60950 충족, (Glass Thickness : 3mm)
Graphic Controller	Intel HD Controller
CPU	Intel Celeron N3450 1.1GHz Quad Core(Max 2.2GHz)
Memory	DDR3 4GB
SSD	mSATA 128GB(Max Read : 500MB/s, Write : 450MB/s) mSATA 256GB(Max Read : 500MB/s, Write : 450MB/s)
OS	Windows 10 or Linux
USB	Host 2 Ports
Ethernet	2 Ports(1000/100/10 Mb)
Serial/Printer Port	3 Ports(RS-232C 2 Ports, RS485 1 Port)
Keyboard/Mouse	USB Type
CD-ROM	No
Utility	UWF(OS Protection), Recovery(Factory Reset) Software
Voltage	DC 12V(Only)
Waterproof	IP65 대응
Dimension(mm)	595.2(H)*362.2(V)*80(D)

Storage Option...	
mSATA 256GB	Replace mSATA 128GB with 256GB

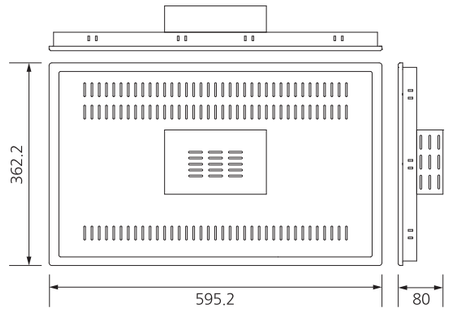

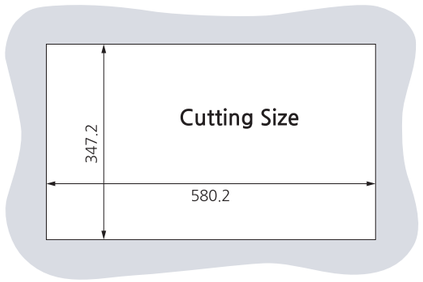

Unit : mm

Autobase Touch Pro
ATP Series

12.1"

ATP12

Specifications...	
Screen Size	12.1 inch
Screen Resolution	1024*768
Touch Screen	Pen Mount 5 Wire USB Controller
Graphic Controller	Intel HD Controller
CPU	Intel Celeron N3450 1.1GHz Quad Core(Max 2.2 GHz)
Memory	DDR3L 1333MHz 4GB or 8GB
SSD	mSATA 64GB(Max Read : 500MB/s, Write : 200MB/s) mSATA 128GB(Max Read : 540MB/s, Write : 520MB/s) mSATA 256GB(Max Read : 540MB/s, Write : 520MB/s)
OS	Windows IoT Enterprise(32/64bit)
USB	USB 3.0 2 Ports
HDMI	1 Port
VGA	1 Port
Ethernet	Gigabit Ethernet LAN 2 Ports(10/100/1000Mbits/s)
Serial/Printer Port	RS-232C 4 Ports(selectable RS422/485 2 Ports)
Keyboard/Mouse	USB Type
CD-ROM	No
Utility	UWF(OS Protection), Recovery(Factory Reset) Software
Waterproof	No
Weight(g)	3,840
Dimension(mm)	322(H)*255(V)*84.4(D)

Storage Option...	
mSATA 250GB	Replace SSD 120GB with 250GB

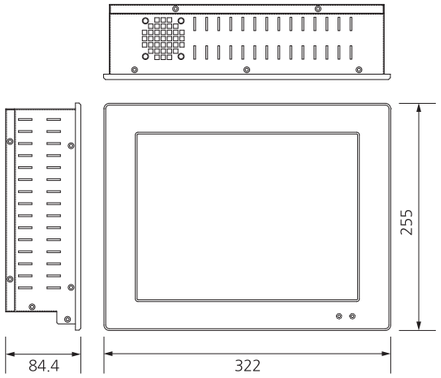

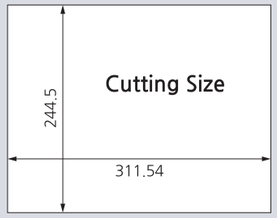

Unit : mm

Autobase Touch Pro
ATP Series

15"

ATP15

Specifications...	
Screen Size	15 inch
Screen Resolution	1024*768
Touch Screen	Pen Mount 5 Wire USB Controller
Graphic Controller	Intel HD Controller
CPU	Intel Celeron N3450 1.1GHz Quad Core(Max 2.2 GHz)
Memory	DDR3L 1333MHz 4GB or 8GB
SSD	mSATA 64GB(Max Read : 500MB/s, Write : 200MB/s) mSATA 128GB(Max Read : 540MB/s, Write : 520MB/s) mSATA 256GB(Max Read : 540MB/s, Write : 520MB/s)
OS	Windows IoT Enterprise(32/64bit)
USB	USB 3.0 2 Ports
HDMI	1 Port
VGA	1 Port
Ethernet	Gigabit Ethernet LAN 2 Ports(10/100/1000Mbits/s)
Serial/Printer Port	RS-232C 4 Ports(selectable RS422/485 2 Ports)
Keyboard/Mouse	USB Type
CD-ROM	No
Utility	UWF(OS Protection), Recovery(Factory Reset) Software
Waterproof	No
Weight(g)	5,010
Dimension(mm)	378(H)*308(V)*100.4(D)

Storage Option...	
mSATA 250GB	Replace SSD 120GB with 250GB

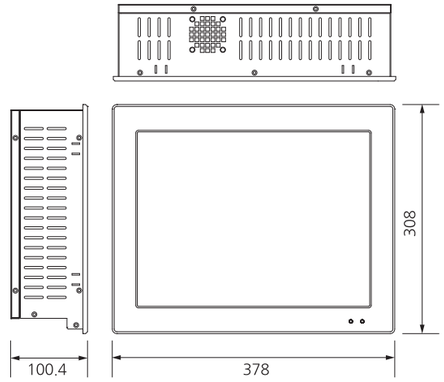

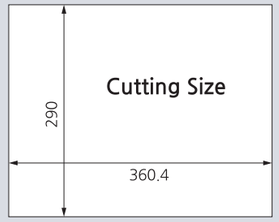

Unit : mm

Autobase Touch Pro
ATP Series

15"

ATP15P

Specifications...

Screen Size	15 inch
Screen Resolution	1024*768
Touch Screen	Pen Mount 5 Wire USB Controller
Graphic Controller	Intel HD Controller
CPU	Intel Celeron N3450 1.1GHz Quad Core(Max 2.2 GHz)
Memory	DDR3L 1333MHz 4GB or 8GB
SSD	mSATA 64GB(Max Read : 500MB/s, Write : 200MB/s) mSATA 128GB(Max Read : 540MB/s, Write : 520MB/s) mSATA 256GB(Max Read : 540MB/s, Write : 520MB/s)
OS	Windows IoT Enterprise(32/64bit)
USB	USB 3.0 2 Ports
HDMI	1 Port
VGA	1 Port
Ethernet	Gigabit Ethernet LAN 2 Ports(10/100/1000Mbits/s)
Serial/Printer Port	RS-232C 4 Ports(selectable RS422/485 2 Ports)
Keyboard/Mouse	USB Type
CD-ROM	No
Utility	UWF(OS Protection), Recovery(Factory Reset) Software
Waterproof	IP65 대응
Weight(g)	5,770
Dimension(mm)	370(H)*300(V)*85(D)

Storage Option...

mSATA 250GB	Replace SSD 120GB with 250GB

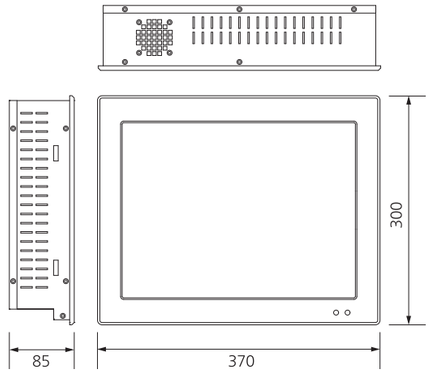

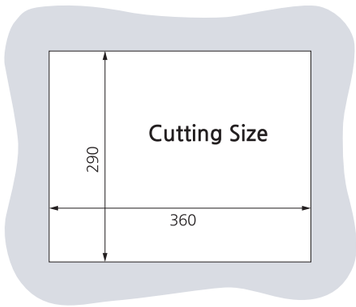

Unit : mm

ATP Series

Autobase Touch Pro
ATP Series

17"

ATP17

Specifications...

Screen Size	17 inch
Screen Resolution	1280*1024
Touch Screen	Pen Mount 5 Wire USB Controller
Graphic Controller	Intel HD Controller
CPU	Intel Celeron N3450 1.1GHz Quad Core(Max 2.2 GHz)
Memory	DDR3L 1333MHz 4GB or 8GB
SSD	mSATA 64GB(Max Read : 500MB/s, Write : 200MB/s) mSATA 128GB(Max Read : 540MB/s, Write : 520MB/s) mSATA 256GB(Max Read : 540MB/s, Write : 520MB/s)
OS	Windows IoT Enterprise(32/64bit)
USB	USB 3.0 2 Ports
HDMI	1 Port
VGA	1 Port
Ethernet	Gigabit Ethernet LAN 2 Ports(10/100/1000Mbits/s)
Serial/Printer Port	RS-232C 4 Ports(selectable RS422/485 2 Ports)
Keyboard/Mouse	USB Type
CD-ROM	No
Utility	UWF(OS Protection), Recovery(Factory Reset) Software
Waterproof	No
Weight(g)	7,690
Dimension(mm)	405.7(H)*347(V)*90.3(D)

Storage Option...

mSATA 250GB	Replace SSD 120GB with 250GB

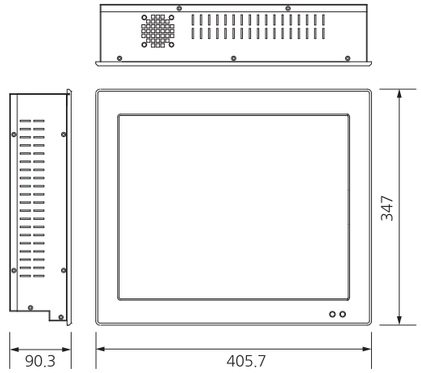

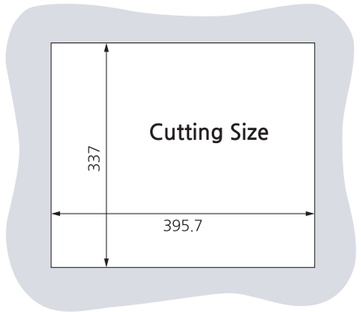

Unit : mm

Autobase Touch Pro

ATP Series

19"

ATP19

Specifications...

Screen Size	19 inch
Screen Resolution	1280*1024
Touch Screen	Pen Mount 5 Wire USB Controller
Graphic Controller	Intel HD Controller
CPU	Intel Celeron N3450 1.1GHz Quad Core(Max 2.2 GHz)
Memory	DDR3L 1333MHz 4GB or 8GB
SSD	mSATA 64GB(Max Read : 500MB/s, Write : 200MB/s) mSATA 128GB(Max Read : 540MB/s, Write : 520MB/s) mSATA 256GB(Max Read : 540MB/s, Write : 520MB/s)
OS	Windows IoT Enterprise(32/64bit)
USB	USB 3.0 2 Ports
HDMI	1 Port
VGA	1 Port
Ethernet	Gigabit Ethernet LAN 2 Ports(10/100/1000Mbits/s)
Serial/Printer Port	RS-232C 4 Ports(selectable RS422/485 2 Ports)
Keyboard/Mouse	USB Type
CD-ROM	No
Utility	UWF(OS Protection), Recovery(Factory Reset) Software
Waterproof	No
Weight(g)	8,910
Dimension(mm)	444.5(H)*372.5(V)*90.3(D)

Storage Option...

mSATA 250GB	Replace SSD 120GB with 250GB

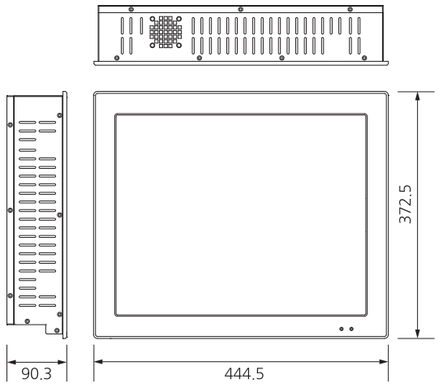

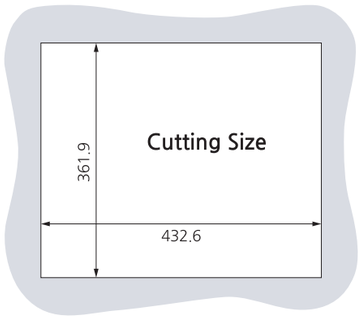

Unit : mm

Autobase

Embedded Computer

Specifications...

Model Name	ATS-M1000DA5H	ATS-M1000DA7H
Main Board	AB-M1000DA5	AB-M1000DA7
Touch Screen	4 Wire Resistive	
CPU	Cortex A9 Dual 1,000MHz	
Memory	DRAM 512MB DDR3, NAND Flash 512MB	DRAM 512MB DDR3, NAND Flash 512MB (Option : DRAM 1GB DDR3, NAND Flash 1GB)
OS	Windows Compact 7(CE 7)	
USB	USB Host 2 Ports, USB Device 1 Port	
HDMI	1 Port	
Audio	Speaker embedded, Stereo audio output(Ø3.5), 1 Mic(Option)	
Camera	Option	
Ethernet	1 Port(Gigabit)	
SD Card	MicroSD 1 Slot (SDHC up to 32GB, SDXC up to 2TB)	
Serial Port	4 Ports(RS-232C 1 Port, RS-232C(Option) 2 Ports, RS-485 1 Port)	4 Ports(RS-232C 3 Ports, RS-485/232C 1 Port)
Extension Port	GPIO(16ch), PWM(2ch), A/D Converter(4ch)	
Voltage	DC 9~24V	
Operating Temperature	Min. -10℃ / Max. 70℃	
Dimension(mm)	132.34(H)*105.84(V)*31.2(D)	175(H)*115(V)*34.1(D)

Autobase

Embedded & Interface Board

Specifications...

Model Name	AB-M1000DA5	AB-M1000DA7
CPU	Cortex A9 Dual 1,000MHz	
Memory	DRAM 512MB DDR3, NAND Flash 512MB	
OS	Windows Compact 7(CE 7)	
USB	USB Host 2 Ports, USB Device 1 Port	
HDMI	1 Port	
Audio	Stereo Audio Output, 3.5Φ Audio Jack, 1 Mic(Option)	Speaker embedded, Audio Out(Stereo Earphone Jack)
Ethernet	1 Port(Gigabit)	
SD Card	Micro SD 1 Slot (SDHC up to 32GB, SDXC up to 2TB)	
Serial Port	4 Ports (RS-232C 1 Port, RS-232(Option) 2 Ports, RS-485 1 Port)	4 Ports(RS-232C 3 Ports, RS-485/232C 1 Port)
Extension Port	DI 8ch, DO 8ch, AI 4ch, PWM 2ch	GPIO(16EA), PWM(2ch), A/D Converter(4ch)
Voltage	DC 9~24V	
Operating Temperature	Min. -10℃ / Max. 70℃	
Dimension(mm)	125(H)*98(V)*21.5(D)	165(H)*102.2(V)*21.5(D)

Specifications...

Model Name	ACB-CH1	ACB-CH4
Input	1 Channel CVBS Video Input	4 Channel CVBS Video Input and selectable
Output	* YCbCr(4:2:2) Digital Output Format (ITU-R BT.656 compatible) for Recording and Playback	
Power Consumption	<100mW	
Dimension(mm)	35.1(H)×34.9(V)×6.3(D)	59.5(H)×64(V)×17.3(D)

Autobase

Embedded Rack PC

Specifications...

Model Name	ARP-C2	ARP-I1	ARP-I1R
CPU	Intel Celeron N3160 1.6GHz Quad Core(Max 2.2GHz)	Intel core i7-7700T 2.9GHz(Max 3.8GHz) 4 Cores 8 Threads	
RAM	DDR3L 1333MHz 4GB or 8GB	DDR4-2133 8GB or 16GB	
Storage	mSATA 64GB(Max Read : 500MB/S, Write : 200MB/s) mSATA 128GB(Max Read : 540MB/S, Write : 520MB/s) mSATA 256GB(Max Read : 540MB/S, Write : 520MB/s)	SATA 120GB or SATA 250GB	
OS	Windows 10 IoT Enterprise(64bit) or Windows Embedded Standard 7(64bit)	Windows 10 IoT EnterPrise or Windows Embedded Standard 7	
USB 2.0	2 Ports	2 Ports	
USB 3.0	4 Ports	4 Ports	
LAN	Gigabit Ethernet 2 Ports(Dual LAN)	Gigabit Ethernet 2 Ports	
Serial Port	RS-232C 4 Ports(selectable RS422/485 2 Ports)	RS-232C 4 Ports	
Wifi/BlueTooth Wireless(Option)	IEEE 802.11 Wifi ac 2.4GHz/5GHz Dual Band (up to 867Mbps) BlueTooth 4.0	-	
Display	HDMI 1 Port, VGA 1 Port	DP 1.2 1 Port, HDMI 1.4 1 Port	HDMI 3 Ports (2.0 1 Port, 1.4 2 Ports)
RAID	-	-	0 / 1 / 5
Voltage	AC 110~220V	AC110~220V	
Cooling Method	-	Fanless Chassis	
Case Type	Aluminum/Steel Case	Aluminum Whole Case	
Weight(g)	3,380	6,400	
Dimension(mm)	484(W)*44(H)*284(D)	482(H)*299.4(V)*90(D)	

Autobase

Embedded Box PC

Specifications...		
Model Name	ABP-C1	ABP-C3S
CPU	Intel Celeron Bay-Trail J1900 Quad core 2.0 GHz	Intel Celeron N3450 1.1GHz Quad Core(Max 2.2GHz)
Memory	DDR3L 1333HMz 4GB	DDR3L 1333MHz 4GB
SSD	SSD 250GB (Read:540MB/s, Write:520MB/s)	mSATA 128GB(Max Read : 500MB/s, Write : 450MB/s) mSATA 256GB(Max Read : 500MB/s, Write : 450MB/s) * Option : Replace mSATA 128GB with 256GB
OS	Microsoft Windows 7 Embedded	Windows 10
USB 2.0	6 Ports	-
USB 3.0	1 Port	2 Ports
HDMI	1 Port	1 Port
VGA	1 Port	1 Port
Ethernet	-	2 Ports(1000/100/10 Mb)
Serial Port	RS-232C 3 Ports	RS-232C 2 Ports, RS485 1 Port
Voltage	DC 12V 5A	DC 12V 3.3A
Cooling Method	Fanless Chassis	Fanless Chassis
Case Type	Aluminum Whole Case	-
Weight(g)	2,530	1,100
Dimension(mm)	210(H) 204(V) 66(D)	182(H) 115(V) 47(D)

Autobase

I/O Controller & I/O Board

I/O Controller

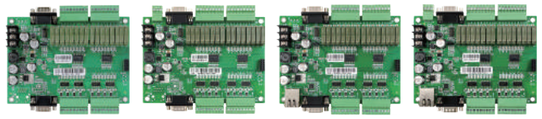

Port Name	Feature	Notice	DIO32R-C	DIO32R-D	DIO32R-E	DIO32R-F
DO-00~15	16 Digital Output (Relay)	5A 30VDC	●	●	●	●
DI-00~15	16 Digital Input	DC 10V~24V	●	●	●	●
Loader	RS-232C	TX, RX, GND	●	●	●	●
RS-232C	COM	TX, RX, GND	●	●	●	●
RS-485	(RS-232C or RS-485)	TX+, RX-, F.G		●		●
LAN	10/100MB Ethernet	RJ45			●	●
DC IN	DC Input	DC12~24V	●	●	●	●
RESET	Option		●	●	●	●
* ICE	ICE Interface	JTAG	●	●	●	●

I/O Board

Specifications...			
Model Name	AIB-MT22	AIB-MT20	AIB-DIO16
Digital Input(DI)	8 Ch	8 Ch	8 Ch
Digital Output(DO)	8 Ch	8 Ch	8 Ch
Analog Input(AI)	4 Ch	2 Ch	-
PWM Output	2 Ch	2 Ch	-
Dimension(mm)	156.8(H)*100(V)*14.4(D)	156.8(H)*100(V)*14.4(D)	148.4(H)*100(V)*14.4(D)

Programmable Logic Controller

AutoBase PLC

AIC-PL17 Series

Port Name		Notice	AIC-PL17-C	AIC-PL17-D	AIC-PL17-E	AIC-PL17-F
CPU		32Bit-ARM Cortex-M4 120MHz	●	●	●	●
Flash		512Kbytes	●	●	●	●
SRAM		128Kbyte	●	●	●	●
DI 0~7	8 Digital Input	DC12~24V/4mA	●	●	●	●
DO 0~6	7 Digital Output (Relay)	DC10V~24V/2A	●	●	●	●
		AC220V/2A	●	●	●	●
AI 0~1	2 Analog Input	4~20mA	●	●	●	●
LOADER	COM	TX, RX, GND	●	●	●	●
*RS-232C	COM	TX, RX, GND	●	●	●	●
*RS-485	(RS-232C or RS-485)	TX+, TX-, FG		●		●
LAN	10/100MB Ethernet	RJ45			●	●

* Only one of the RS-232C or RS-485 can be selected.

AIC-PL8 Series

Port Name		Notice	AIC-PL8-C	AIC-PL8-D	AIC-PL8-E	AIC-PL8-F
CPU		32Bit-ARM Cortex-M4 120MHz	●	●	●	●
Flash		512Kbytes	●	●	●	●
SRAM		128Kbyte	●	●	●	●
DI 0~3	4 Digital Input	DC12~24V/4mA	●	●	●	●
DO 0~1	2 Digital Output (Relay)	DC10V~24V/2A	●	●	●	●
		AC220V/2A	●	●	●	●
AI 0~1	2 Analog Input	4~20mA	●	●	●	●
LOADER	COM	TX, RX, GND	●	●	●	●
*RS-232C	COM	TX, RX, GND	●	●	●	●
*RS-485	(RS-232C or RS-485)	TX+, TX-, FG		●		●
LAN	10/100MB Ethernet	RJ45			●	●

* Only one of the RS-232C or RS-485 can be selected.

AIC-PL8T Series

Port Name		Notice	AIC-PL8T-C	AIC-PL8T-D	AIC-PL8T-E	AIC-PL8T-F
CPU		32Bit-ARM Cortex-M4 120MHz	●	●	●	●
Flash		512Kbytes	●	●	●	●
SRAM		128Kbyte	●	●	●	●
DI 0~3	4 Digital Input	DC12~24V/4mA	●	●	●	●
DO 0~1	2 Digital Output (Relay)	DC10V~24V/2A	●	●	●	●
		AC220V/2A	●	●	●	●
AI 0~1 Temp.	2 Analog Input	Temperature (NTC-10K)	●	●	●	●
LOADER	COM	TX, RX, GND	●	●	●	●
*RS-232C	COM	TX, RX, GND	●	●	●	●
*RS-485	(RS-232C or RS-485)	TX+, TX-, FG		●		●
LAN	10/100MB Ethernet	RJ45			●	●

* Only one of the RS-232C or RS-485 can be selected.

Autobase
Converter

Specifications...			
Model Name		ACS-C485	ACS-C485I
Communication Mod		Async Type Serial Communication	
RS-485/422 Mode		Point to Point, Multi-Drop	
Opto-isolation		-	±3.7KV
Max Speed		460kbps	
Max Distance		1.2Km(just use 24AWG twisted pair Cable)	
Connector	RS-232C	DB9 Female	
	RS-422/485	Terminal 4 Pin	
Signal Pin	RS-232C	TXD, RXD, GND, (RTS, DTR : for power supply)	
	RS-422	TXD+, TXD-, RXD+, RXD-	
	RS-485	TRXD+, TRXD-	
Dip Switch		selectable RS-485/422 Mode, Terminal Resistor ON/OFF, Full Up/Down Resistor ON/OFF	
Power	None Input Power	Use RS-232C TXD, RTS, DTR Pin	
	Input Power	Use USB Type DC5V Adaptor or USB Pin	
Electrostatic Discharge Protect Range		Contact ±8KV, Air ±15KV	
Surge Protect Range		24A, 600W	
Operating Temperature		Min. -40℃ / Max. 85℃	

* Only ACS-C485I model support opto-isolation function.

Autobase
Watchdog

Specifications...	
Model Name	AWD-SMART
Operating Temperature	Min. -40℃ / Max. 85℃
Power Consumption	Under 150mW(@DC+5V)
Dimension(mm)	62.5(H)*25.2(V)*17(D)

Autobase
Touch Monitor

Specifications...	
Model Name	TDM-24A2
Screen Size	24 inch
Screen Resolution	1920*1080
Brightness	1,000 cd/㎡(High Luminance)
Lifetime	50,000 hours(typical, 25℃)
Touch Screen	Capacitive Multi Touch(Tempered Glass, AG lamination), Ball Drop Test UL60950 (Glass Thickness : 3mm)
HDMI	1 Port
VGA	1 Port
Voltage	DC 12V(Only)
Waterproof	IP65 대응
Dimension(mm)	595.2(H)*362.2(V)*33(D)